The following material is confidential.

TY-300

Contents

TY-300 Installation

TY-300 Installation Information 6
TY-300 Installation Instructions 7

TY-300 Print Head Replacement

TY-300 Print head Replacement Information 30
TY-300 Print head Replacement Procedure 31

TY-300 Main Board Replacement

TY-300 Main Board Replacement Procedure 38
TY-300 Main board replacement and adjustment 40

TY-300 Firmware Installation

TY-300 Firmware Installation Information 52
TY-300 Firmware installation procedure 53

TY-300 Firmware Update

TY-300 Firmware Update Information 59
TY-300 Firmware Update Procedure 60

TY-300 Limit position adjustment

TY-300 Limit Position Adjustment Information 62
TY-300 Limit position initialization procedure 63

TY-300 Print head position adjustment

TY-300 Print Head Alignment Information 65
TY-300 Print head alignment procedure 66

TY-300 Belt tension adjustment

TY-300 Belt Tension Adjustment Information 75
TY-300 Belt tension adjustment procedure 76

TY-300 Belt position adjustment

TY-300 Belt Position Adjustment Information 80
TY-300 Belt position adjustment procedure 82

TY-300 scan motor replacement

TY-300 Scan Motor Replacement Information 93
TY-300 Scan Motor Replacement Procedure 95

TY-300 Feed motor replacement

TY-300 Feed Motor Replacement Information 103
TY-300 Feed Motor Replacement Procedure 105

TY-300 Belt Replacement

TY-300 Belt Replacement Information 113
TY-300 Belt Replacement Procedure 114

TY-300 Encoder Scale Replacement

TY-300 Encoder Scale Replacement Information 121
TY-300 Encoder Scale Instructions 123

TY-300 Multi-sensor replacement

TY-300 Multi-sensor Replacement Information 128
TY-300 Multi-sensor replacement procedure 130

TY-300 Multi-sensor adjustment

TY-300 Multi-sensor Adjustment Information 136
TY-300 Multi-sensor adjustment procedure 137

TY-300 Battery Replacement

TY-300 Battery Replacement Information 141
TY-300 Battery Replacement procedure 142

TY-300 Wiper Position Adjustment

TY-300 Wiper Position Adjustment Information 145
TY-300 Wiper position Adjustment procedure 146

TY-300 Linear Encoder Setup

TY-300 Linear Encoder Setup 148
TY-300 Linear Encoder Setup 148

TY-300 Feed Calibration

TY-300 Feed Calibration Information 151
TY-300 Feed Calibration Procedure 152

TY-300 Tool pressure adjustment

TY-300 Tool Pressure Adjustment Information 154
TY-300 Tool Pressure Adjustment Procedure 155

TY-300 Cutting Carriage Replacement

TY-300 Cutting Carriage Replacement Information 158
TY-300 Cutting Carriage Replacement Procedure 159

TY-300 Panel replacement

TY-300 Panel Replacement Procedure 164

TY-300 Installation Information

Step 1 / 3

General Tools

一般ツール/General Tool

六角レンチ(付属品) hexagonal wrench(accessory)	
パイプ(付属品) Pipe(accessory)	
No1 プラスドライバー No1 Phillips screwdriver	
ESL4-CL2 4本(別途購入が必要) ESL4-CL2 4 Pcs (Additional purchase required)	

Step 2 / 3

Special tools

特殊治具/Special Tools

Step 3 / 3

Typical work time

作業時間/Typical work time

作業内容/Contents of work	時間/Time
開梱 unpacking	60 min.
インク充填 Ink Filling	40 min.

TY-300 Installation Instructions

Step 1 / 80

Open the top cover.

Step 2 / 80

Remove all boxes and parts included.

Step 3 / 80

Check the accessories list in the setup manual to make sure everything is included.

付属品の確認

本機には次のものが付属しています。すべてそろっているかご確認ください。

スタンドステイ（1）	シャフト（2）	キャスター（2）	スタン下脚（左右各1）
メディアホルダー（左右各1）	アーム（左右各1）	シャフト押さえ（2）	メディアステイ（2）
廃液ボトルスタンド（1）	廃液ボトル（1）	電源コード／電源プラグアダプター1（各1）	テーブルクランプ（2）
ボルト（44）	六角レンチ（1）	パイプ（1）	ピンセット（1）
カッターホルダー（1）	カッター（1）	ピン（1）	セパレーティングナイフ替え刃（1）
洗浄液（1）	交換用ワイパークリーナー（1）	交換用フラッシングスポンジ（1）	交換用ワイパー（1）
クリーニングスティック	スポイト（2）	ヘッドノズルリフレッシャー（1）	クリーニングシート

Step 4 / 80

Place the stand upside down and temporarily assemble the casters. Temporarily tighten the eight bolts for each leg.

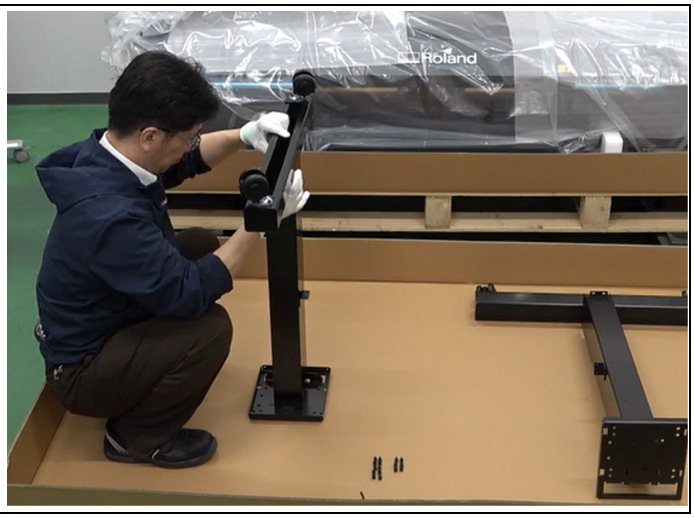

Step 5 / 80

Tighten the four lower bolts.

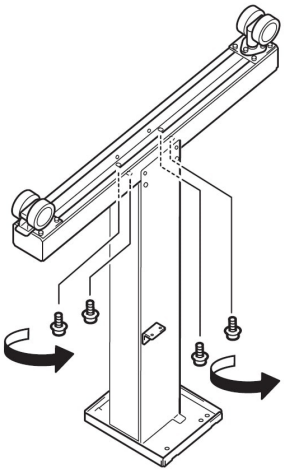

Step 6 / 80

Tighten the four bolts on the side.

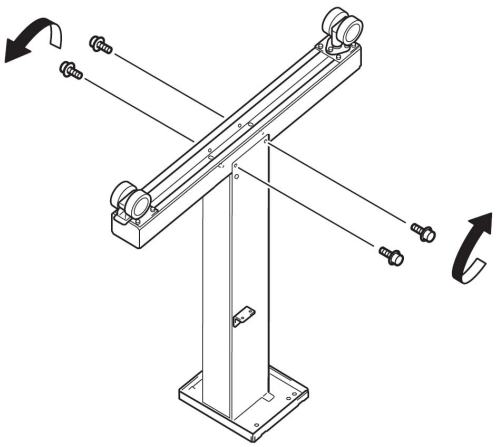

Step 7 / 80

Assemble the other stand in the same way.

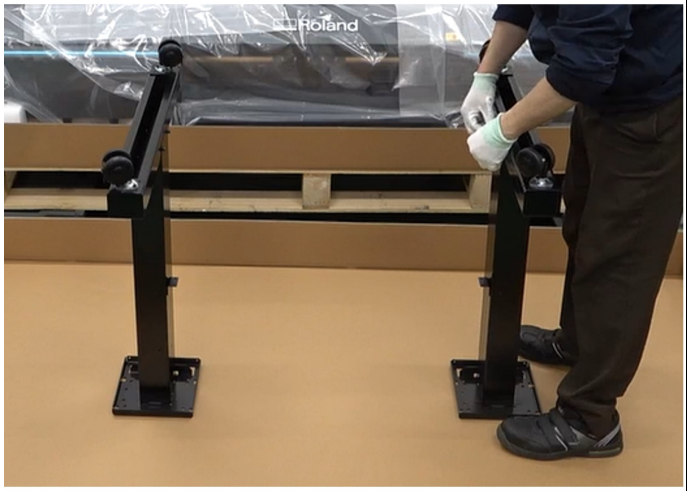

Step 8 / 80

Tilt the stand so that the L-shaped bracket faces inward and the surface with hole A faces downwards. Place it at a width of 930 mm.

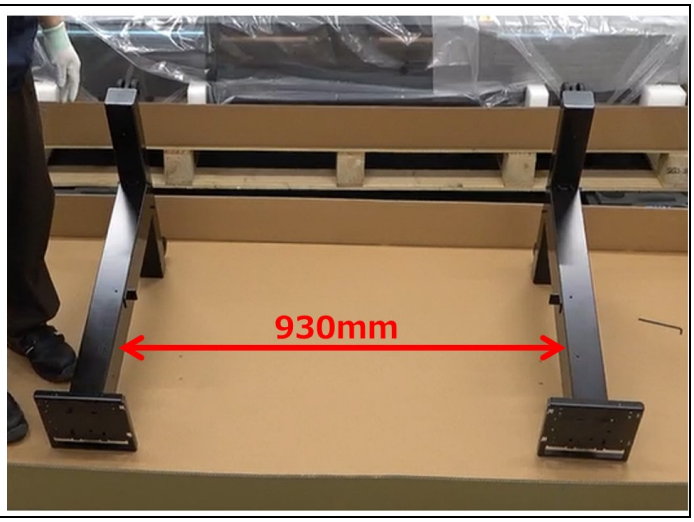

Step 9 / 80

Place the stand stay on top of the stand.

Step 10 / 80

Use the eight bolts to temporarily tighten the stand stay.

Step 11 / 80

Tighten the four bolts A.

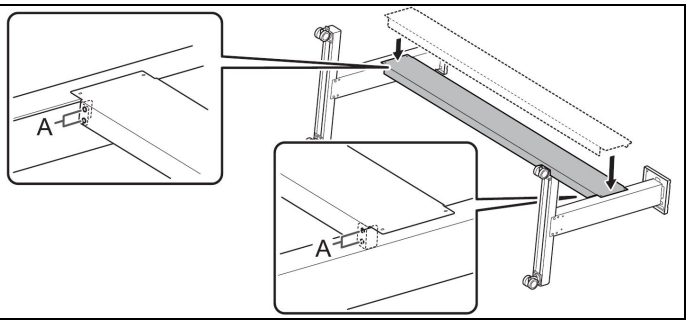

Step 12 / 80

Tighten the four bolts at B.

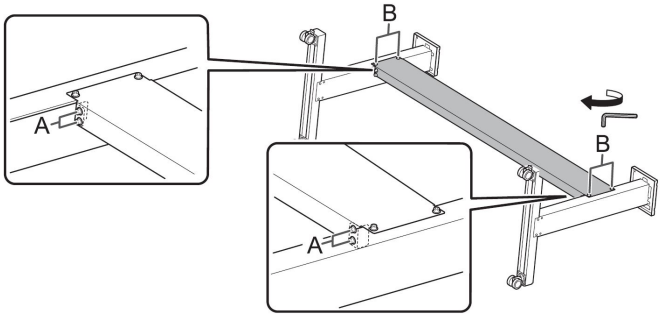

Step 13 / 80

Two people lift the assembled stand and make it stand.

Step 14 / 80

[Caution] The printer should be lifted by at least six people. Also, workers should not let go of the printer until the bolts have been temporarily tightened.

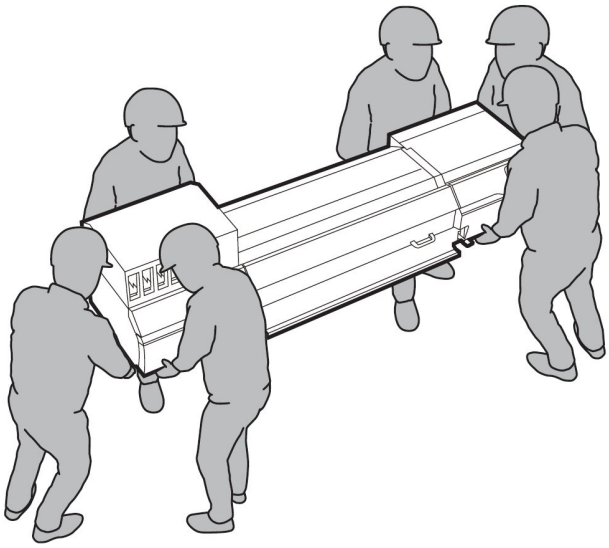

Step 15 / 80

Remove the transparent film covering the printer. Remove the sponge under the back of the printer to make it easier to hold.

Step 16 / 80

Lift the printer.

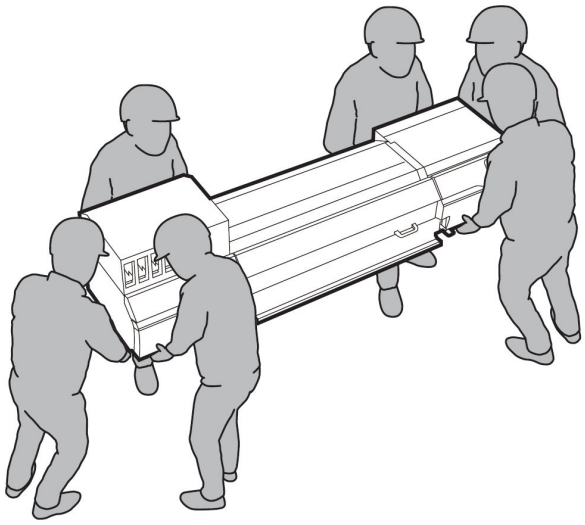

Step 17 / 80

Move the stand under the printer.

Step 18 / 80

Align the left and right sides. Looking at the printer from the back, align the end of the printer's bracket (□) and the end of the triangular mark on the stand (□) so that they form a straight line.

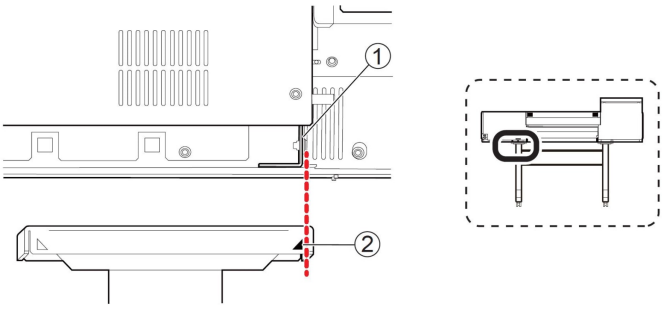

Step 19 / 80

Align the front and rear. Align the bottom edge of the printer body (□) with the center line of the diamond mark (□) inside the stand.

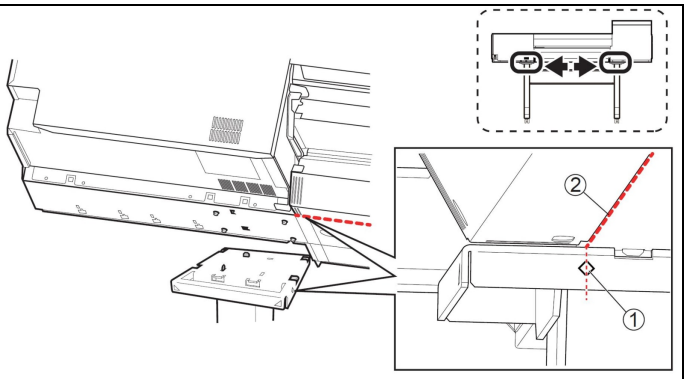

Step 20 / 80

Place the printer on the stand so that the protrusions on the stand fit into the slots on the printer.

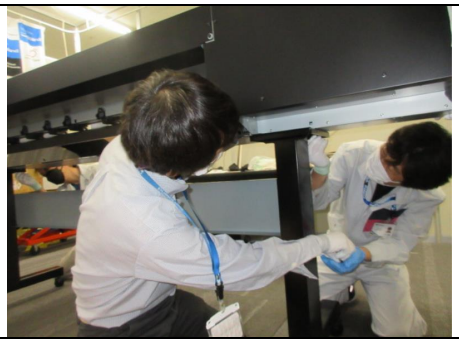

Step 21 / 80

Temporarily fasten the printer body to the stand with eight bolts.

Step 22 / 80

Make sure there are no gaps between the top panels of the left and right stands and the printer body.

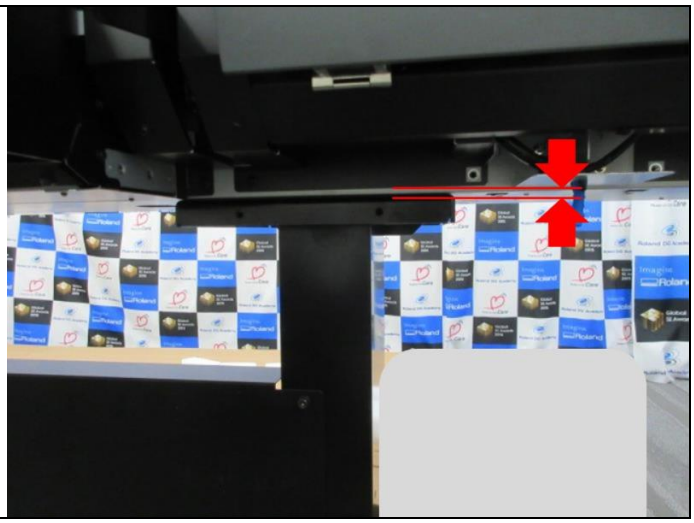

Step 23 / 80

Tighten all eight bolts.

Step 24 / 80

Temporarily tighten the bolt on the stand on the left side when viewed from the back of the printer.

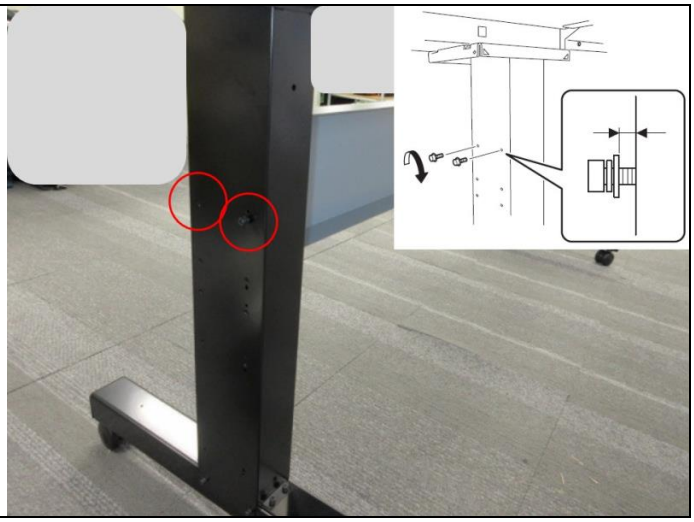

Step 25 / 80

Attach the left arm to the loosely tightened bolt and slide it to the right.

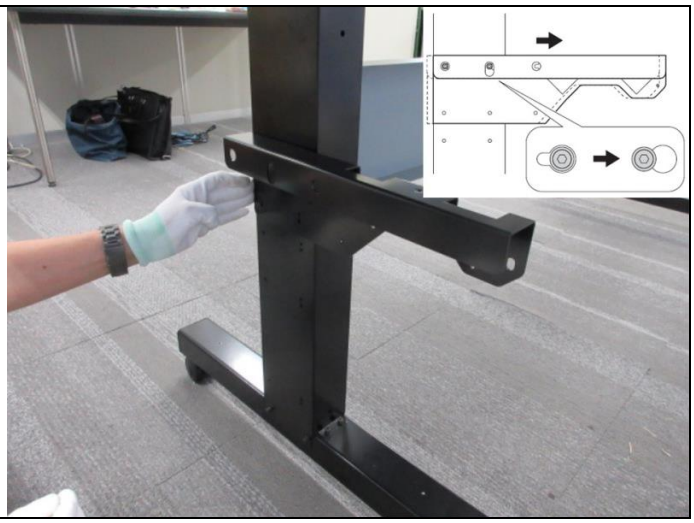

Step 26 / 80

Make sure that the protrusion (A) on the stand leg is centered in the hole (B) on the arm. If it is not centered, move the arm left or right to adjust it.

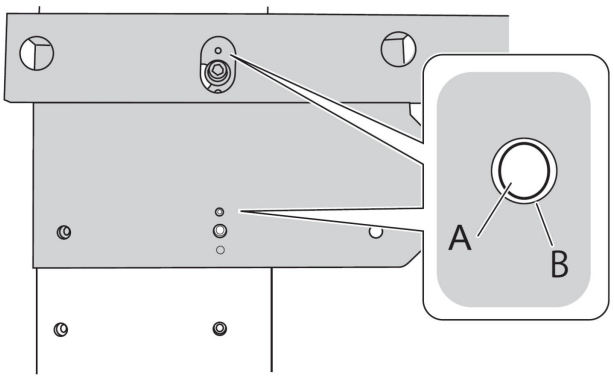

Step 27 / 80

Temporarily tighten the two bolts on the

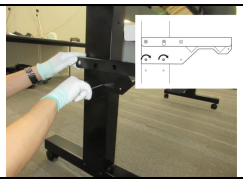

underside of the arm.

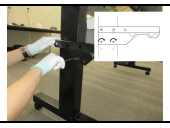

Step 28 / 80

Tighten the bolts on the top of the arm.

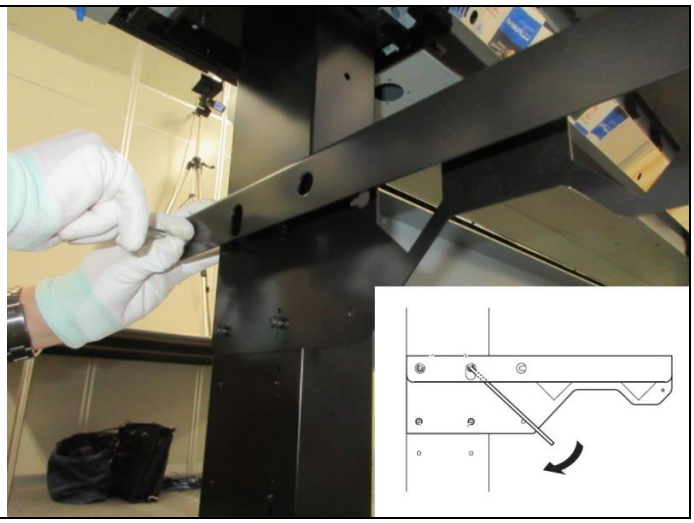

Step 29 / 80

Tighten the two bolts on the underside of the arm.

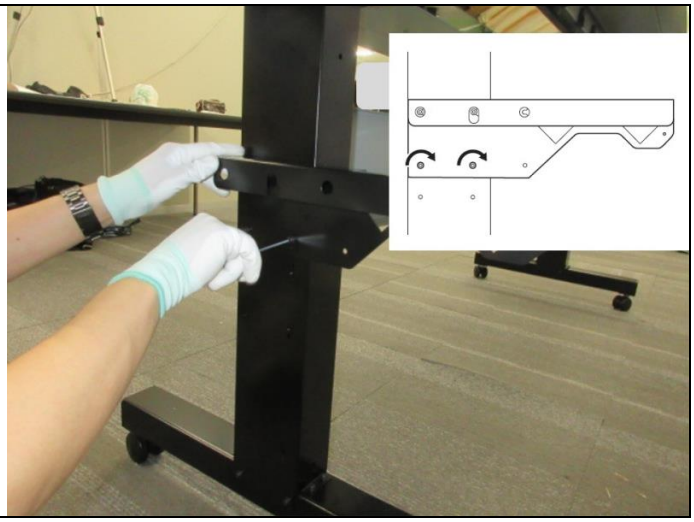

Step 30 / 80

Attach the right arm in the same way to the right side when viewed from the back of the printer.

Step 31 / 80

Place two shafts on the arm.

Step 32 / 80

Pass rear shaft through the two media stays.

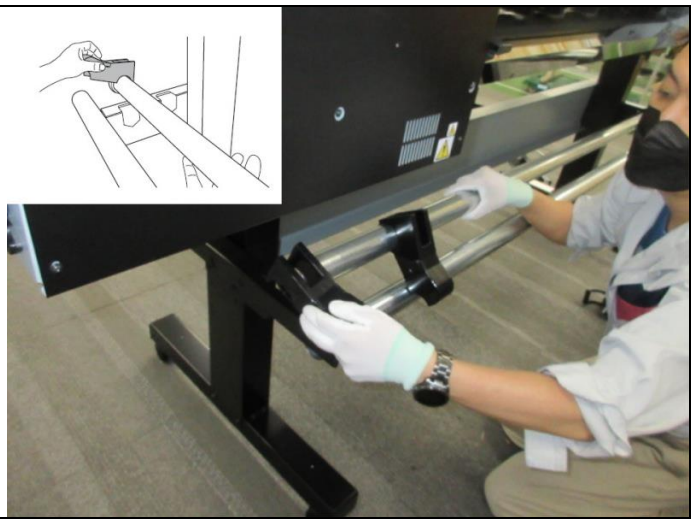

Step 33 / 80

Pass the front shaft through the left media holder. Then, hook the media holder onto the shaft at the back.

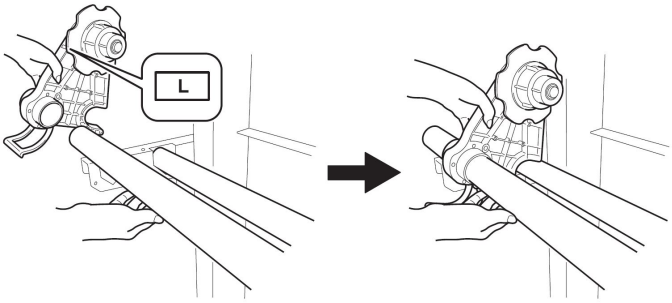

Step 34 / 80

Install the right media holder in the same way.

Step 35 / 80

Place the left and right media holders about 100 mm apart from the edge.

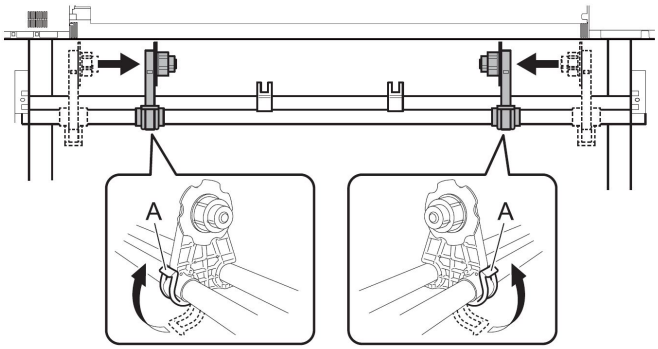

Step 36 / 80

Attach the shaft holders to the left and right and secure each with two bolts.

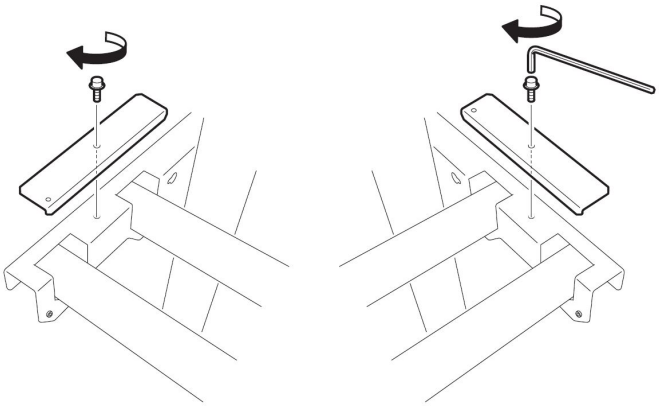

Step 37 / 80

Insert the waste bottle stand into the groove and slide it to the right.

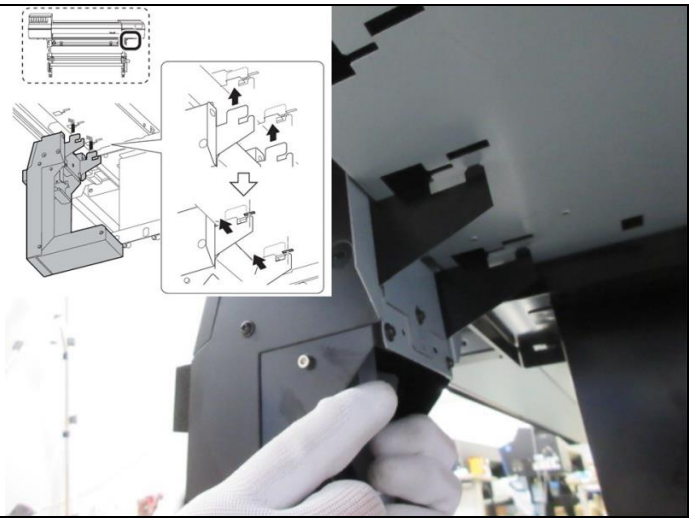

Step 38 / 80

Put the tab (A) into the groove (B) and tilt the waste liquid bottle stand. Put the waste liquid bottle stand in a position

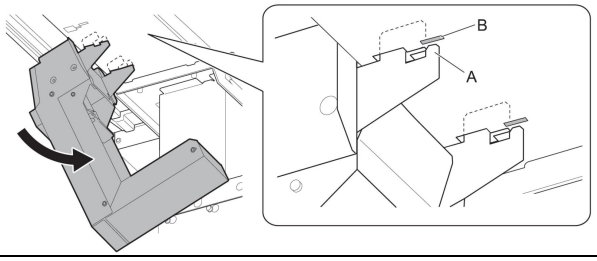

that makes it easy to attach the connector.

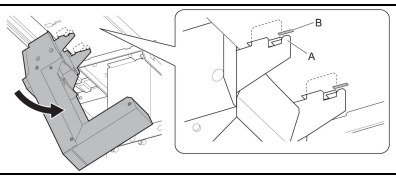

Step 39 / 80

Attach the waste bottle stand connector.

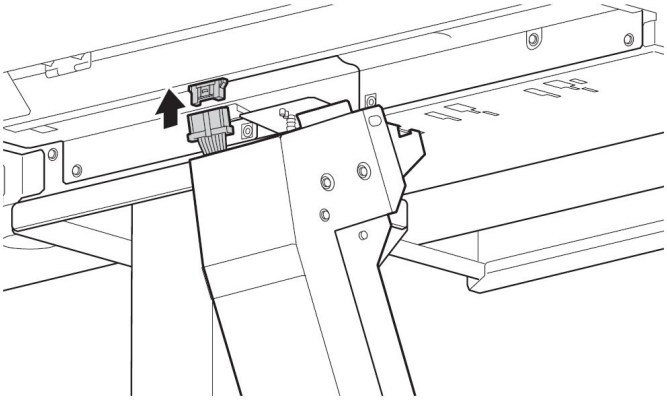

Step 40 / 80

Raise the waste bottle stand vertically ▯, then slide it to the left ▯.

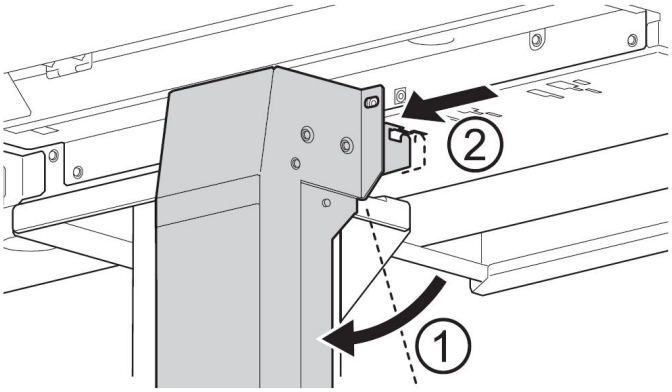

Step 41 / 80

Secure the waste liquid bottle stand by tightening the two bolts.

Step 42 / 80

Remove the two caps from the waste bottle and attach it to the bottle stand.

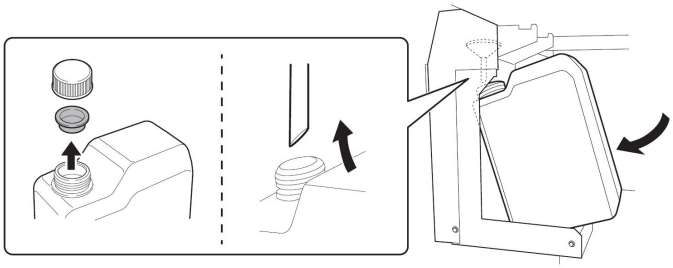

Step 43 / 80

Open the front cover, cover L and cover R.

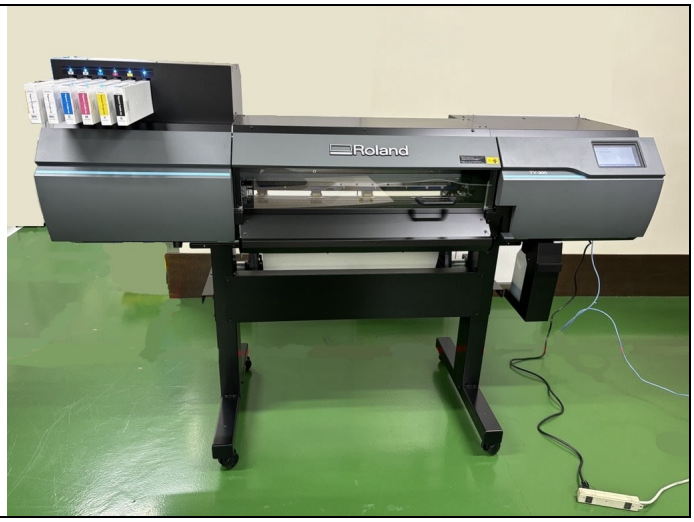

Step 44 / 80

Remove all five retainers.

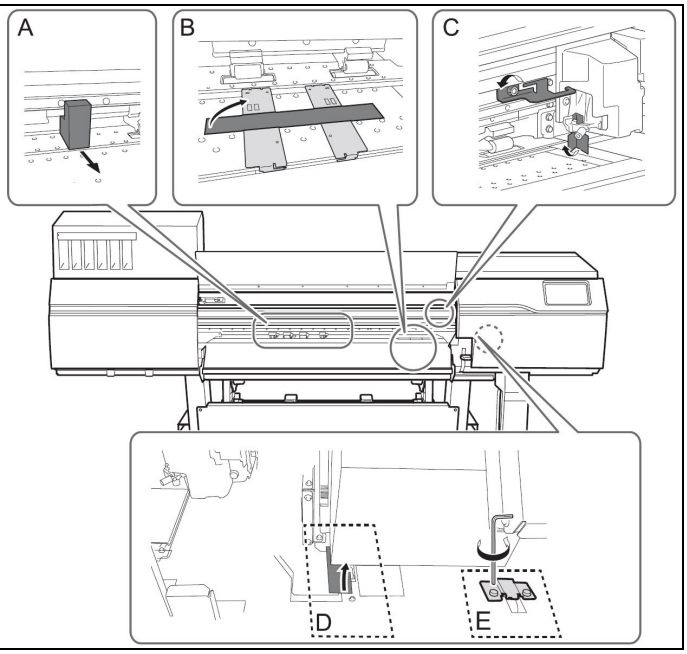

Step 45 / 80

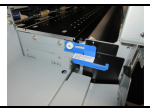

The retainer C that holds the print head carriage is fixed inside the L cover for storage.

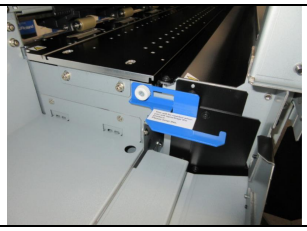

Step 46 / 80

Rotate the gear cover 180 degrees and install it so that the entire gear is hidden.

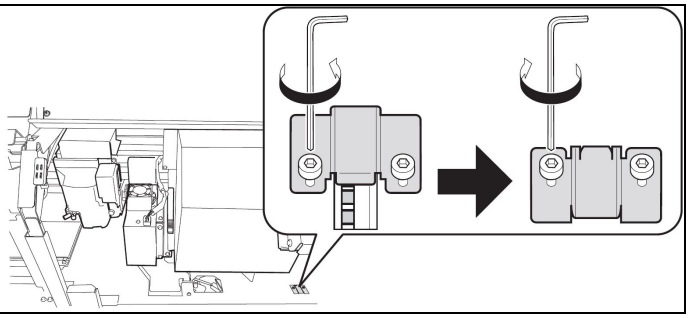

Step 47 / 80

Close the front cover, cover L and cover R.

Step 48 / 80

Connect the power cord and Ethernet cable.

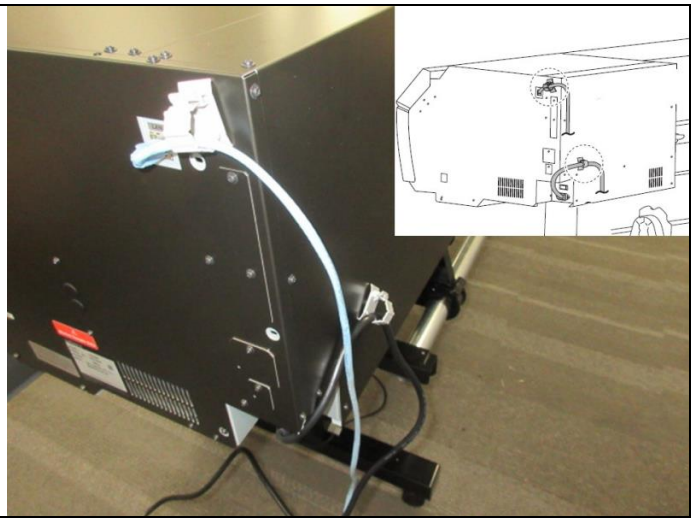

Step 49 / 80

Attach the two cable clamps in the positions shown in the figure to secure the power cord and Ethernet cable.

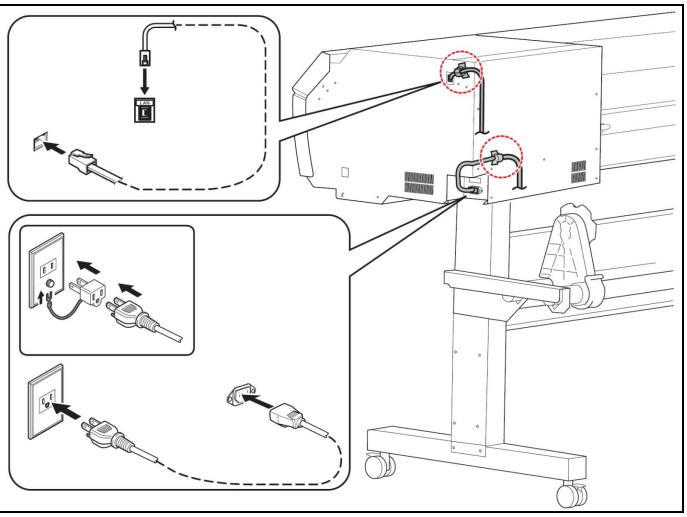

Step 50 / 80

Turn on the main power.

Step 51 / 80

Tap the operation panel.

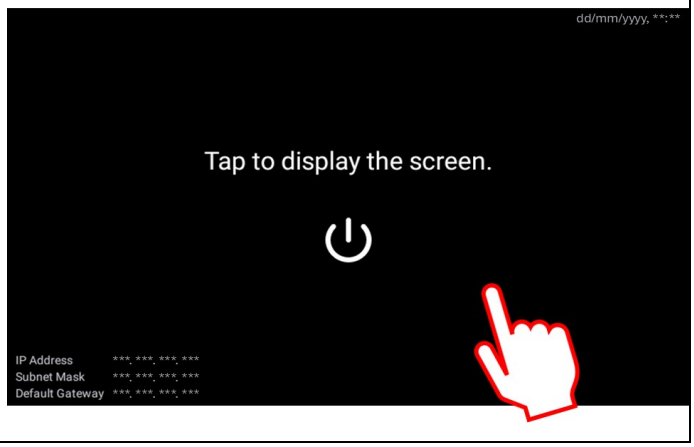

Step 52 / 80

Tap [English] on the language selection screen and select your preferred language.

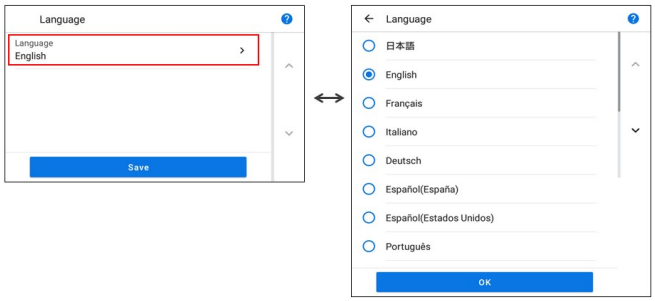

Step 53 / 80

On the [Unit Settings] screen, select [Length Unit] and [Temperature Unit].

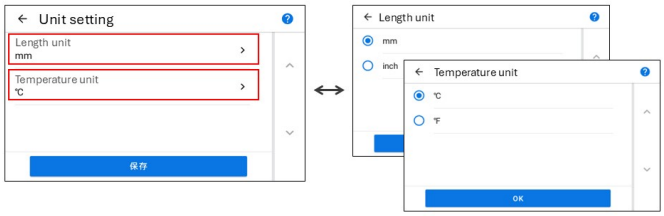

Step 54 / 80

On the [Ink Type Not Set] screen, make sure [S-PG2 CMYKW] is displayed and tap [SAVE].

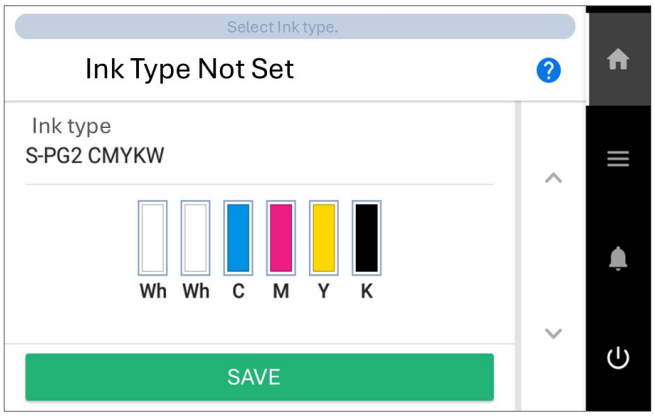

Step 55 / 80

When this screen appears, perform manual cleaning when filling the ink.

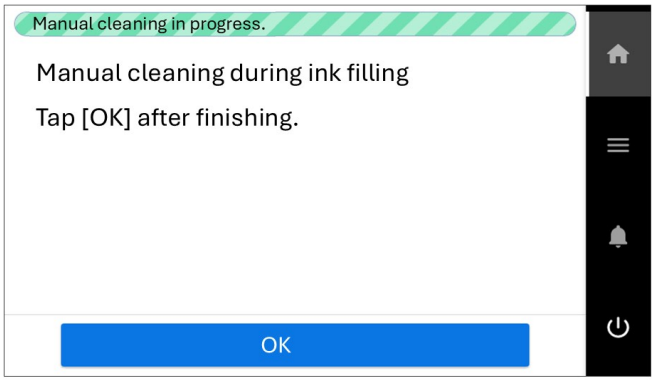

Step 56 / 80

Prepare the included head nozzle refresher, cleaning sheet, dropper, cleaning stick, and cleaning solution (F800).

Step 57 / 80

Open cover L. Touch an unpainted surface to release static electricity.

Step 58 / 80

Attach the cleaning sheet to the head nozzle refresher.

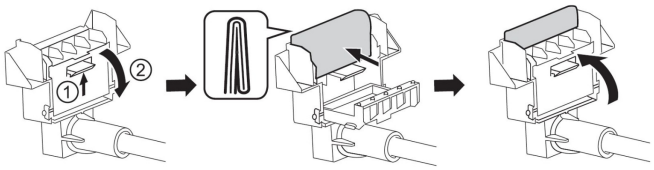

Step 59 / 80

Suck up the cleaning solution with the dropper and drip it onto the cleaning sheet.

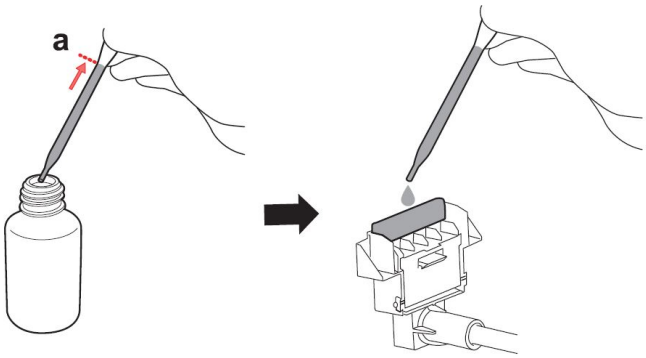

Step 60 / 80

Clean the nozzle surface on the white ink side (left side).

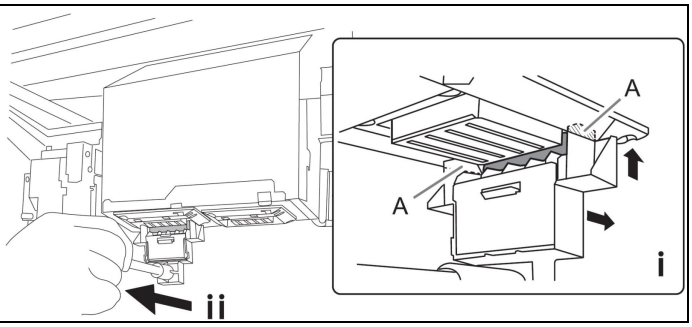

Step 61 / 80

Discard the used cleaning sheet.

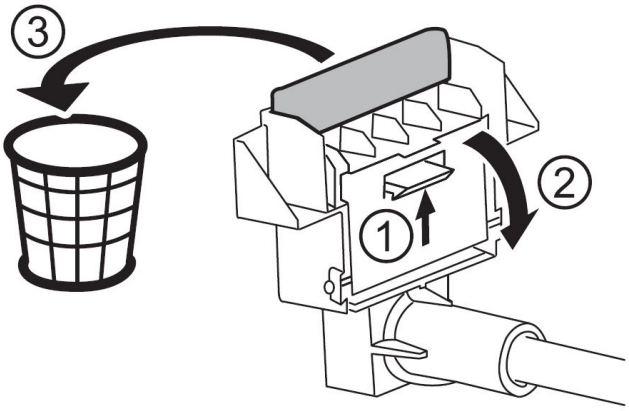

Step 62 / 80

Fold a new cleaning sheet, attach it to the head nozzle refresher, and drip the

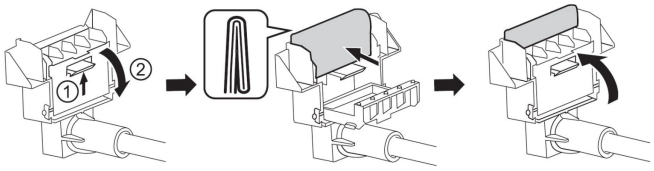

cleaning solution onto it.

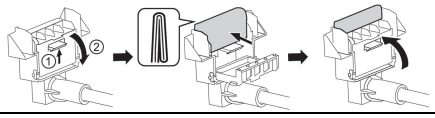

Step 63 / 80

Clean the nozzle surface on the CMYK ink side (right side).

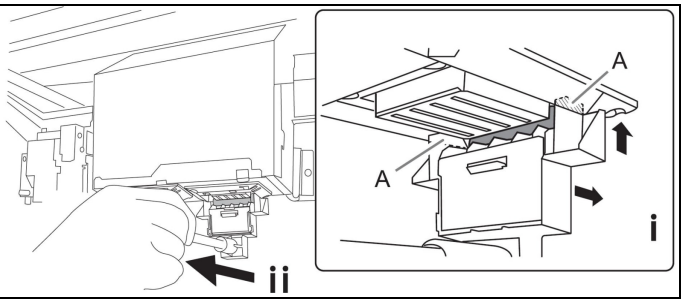

Step 64 / 80

Discard the used cleaning sheet.

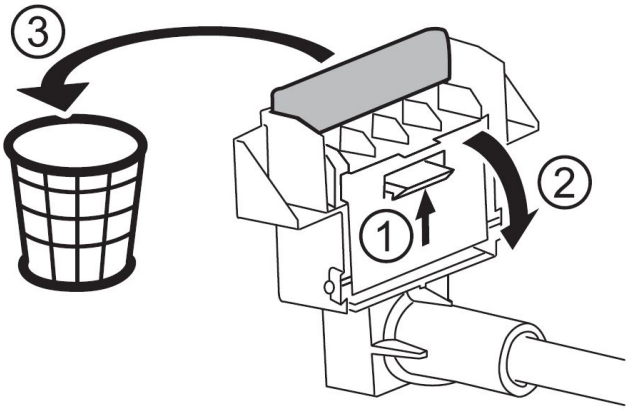

Step 65 / 80

Close cover L.

Step 66 / 80

Open cover R. Touch an unpainted

surface to release static electricity.

Step 67 / 80

Soak a new cleaning stick in the cleaning solution and clean the wiper and the "white ink" side cap. Be sure to clean off any fibrous dust. After cleaning, discard the cleaning stick.

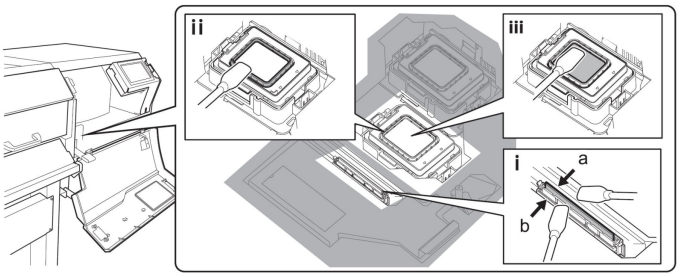

Step 68 / 80

Soak a new cleaning stick in the cleaning solution and clean the cap on the "CMYK ink" side. Be sure to clean off any fibrous dust. After cleaning, discard the cleaning stick.

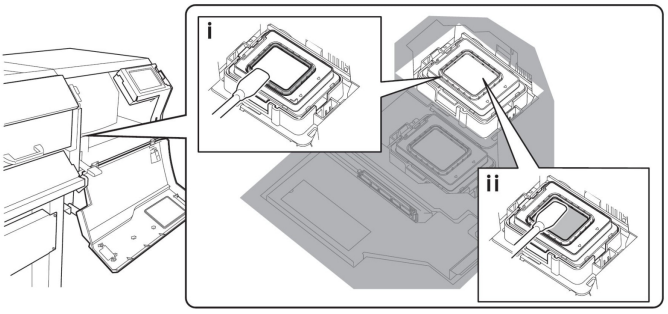

Step 69 / 80

Suck up the cleaning solution with the eyedropper and drip it onto the CMYK and white caps. Press the included eyedropper firmly to suck up the amount: a is for one cap.

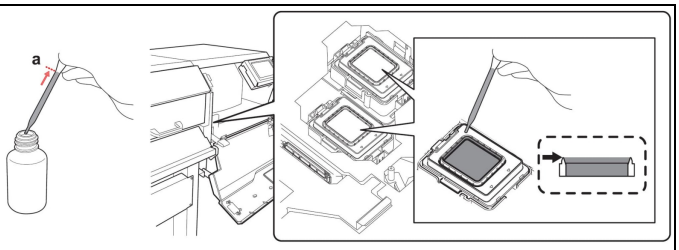

Step 70 / 80

Open the flushing cover and wiper cleaner cover.

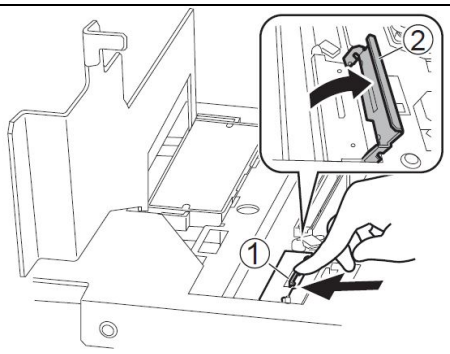

Step 71 / 80

Immerse a new cleaning stick into the cleaning solution. Press the cleaning stick against the top and bottom surfaces of the wiper cleaner several times to apply the cleaning solution.

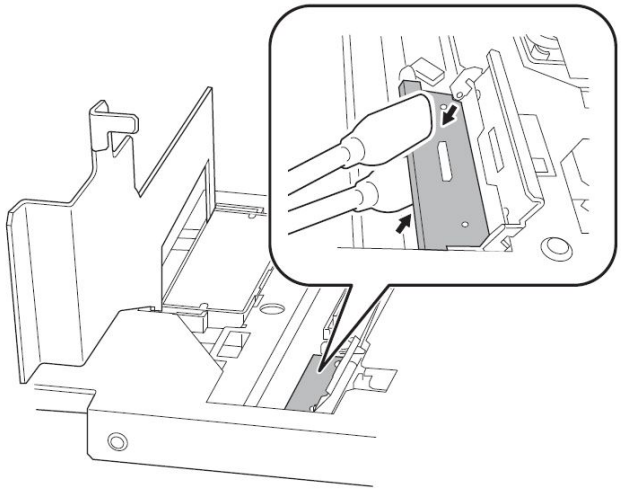

Step 72 / 80

Suck up the cleaning solution with a dropper and drip it onto the three places shown in the figure.

1. Flushing sponge: Drip evenly. 2,3. Both sides of the wiper: Drip evenly to wash away any ink remaining on the wiper and in the grooves.

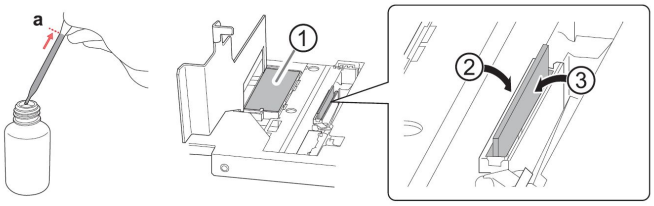

Step 73 / 80

After closing the flushing cover, close cover R.

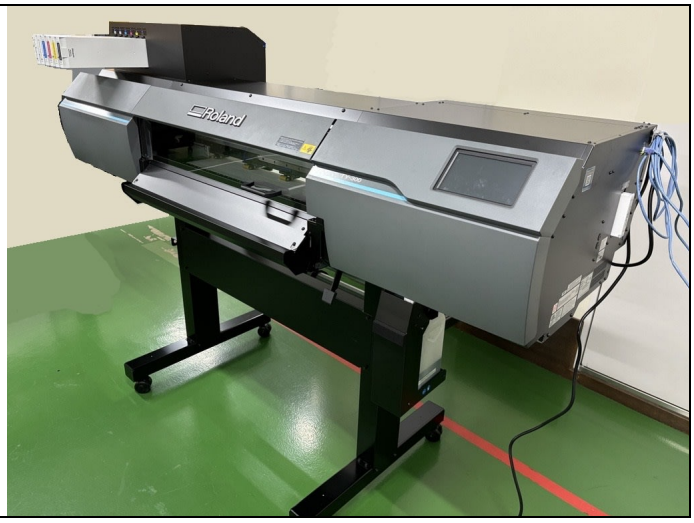

Step 74 / 80

Tap [OK].

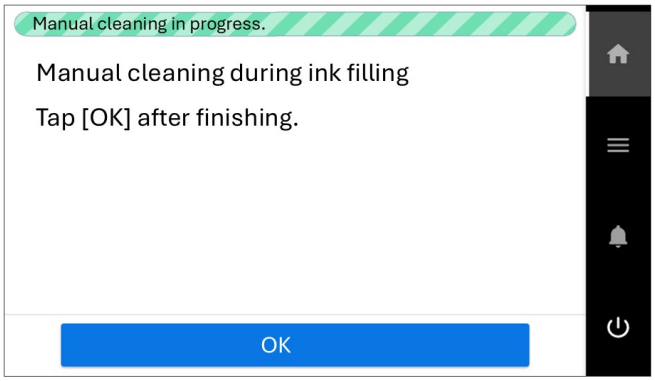

Step 75 / 80

Insert the cleaning liquid cartridge into the cleaning solution slot. With the protrusion (A) of the cartridge facing up, insert it horizontally until it stops.

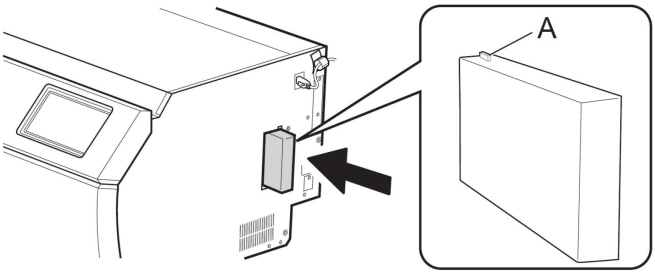

Step 76 / 80

Shake the ink cartridge. White ink: 100 times (about 40 seconds) CMYK ink: 50 times (about 20 seconds)

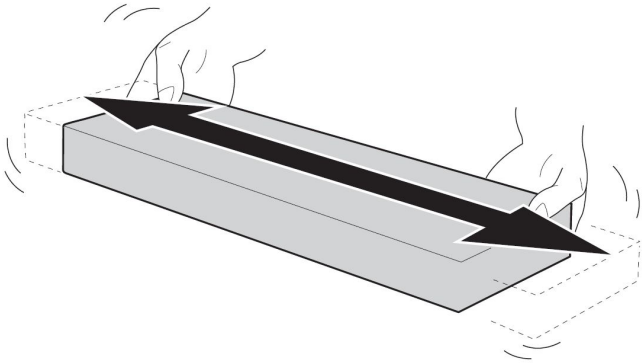

Step 77 / 80

Insert the ink cartridge into the ink slot. Insert the cartridge horizontally with the protrusion (A) facing up until it stops.

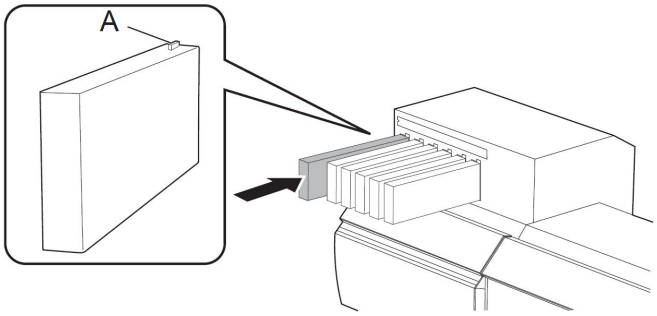

Step 78 / 80

Once all the ink has been inserted, ink filling will begin. When ink filling is complete, the top screen will be displayed.

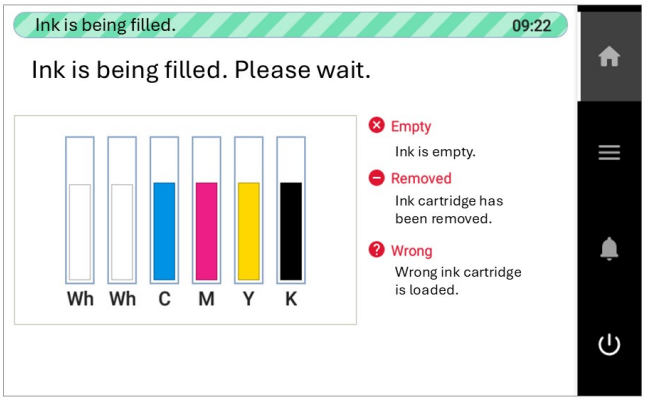

Step 79 / 80

TY-300 Perform print head alignment.

Step 80 / 80

Return to the Setup Manual and refer to "Installing the Cutting Tool" and onwards to complete the installation process.

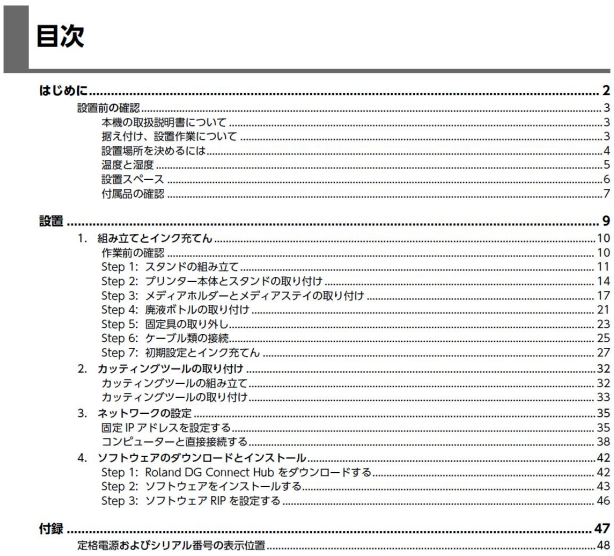

目次

はじめに 2
設置前の確認 3
本機の取扱説明書について 3
据え付け、設置作業について 3
設置場所を決めるには 4
温度と湿度 5
設置スペース 6
付属品の確認 7
設置 9
1. 組み立てとインク充てん 10
作業前の確認 10
Step 1: スタンドの組み立て 11
Step 2: プリンター本体とスタンドの取り付け 14
Step 3: メディアホルダーとメディアステイの取り付け 17
Step 4: 廃液ボトルの取り付け 21
Step 5: 固定具の取り外し 23
Step 6: ケーブル類の接続 25
Step 7: 初期設定とインク充てん 27
2. カッティングツールの取り付け 32
カッティングツールの組み立て 32
カッティングツールの取り付け 33
3. ネットワークの設定 35
固定 IP アドレスを設定する 35
コンピューターと直接接続する 38
4. ソフトウェアのダウンロードとインストール 42
Step 1: Roland DG Connect Hub をダウンロードする 42
Step 2: ソフトウェアをインストールする 43
Step 3: ソフトウェア RIP を設定する 46
付録 47
定格電源およびシリアル番号の表示位置 48

TY-300 Print head Replacement Information

Step 1 / 3

General Tools

一般ツール/General Tool

プラスドライバー No.2 No.2 Phillips screwdriver	
手袋 Groves	
保護メガネ Goggle	
ウエス Rag	

Step 2 / 3

Special tools

特殊治具/Special Tools

ST-056 TORQUE DRIVER N6	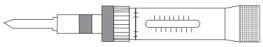
1000006902 TOOL,BIT HEXAGONAL ST-118	

Step 3 / 3

Typical work time

作業時間/Typical work time

作業内容/Contents of work	時間/Time
ヘッド交換 Head Replacement	30 min.
ヘッド情報クリア Clearing the print head information	1 min.

TY-300 Print head Replacement Procedure

Step 1 / 21

Remove the cover.

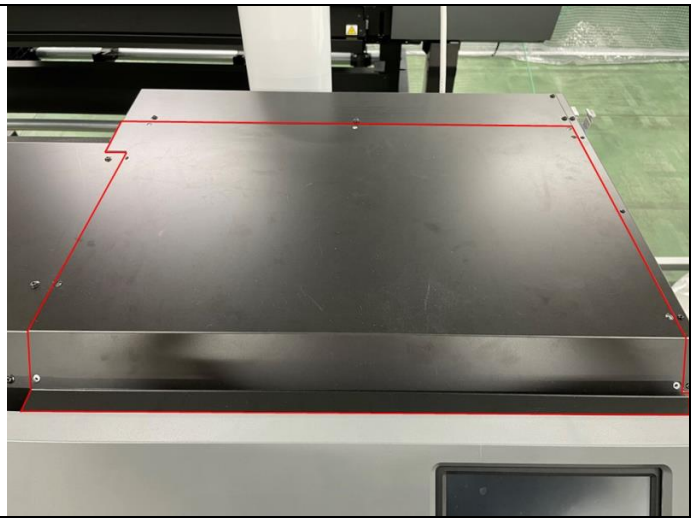

Step 2 / 21

Remove the cap elevation gear cover.

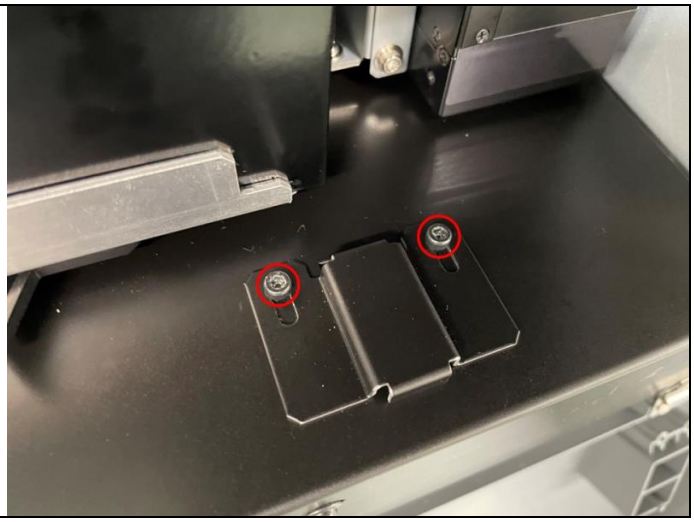

Step 3 / 21

Turn the gear backward about five times to lower the cap, then move the carriage slightly to the left.

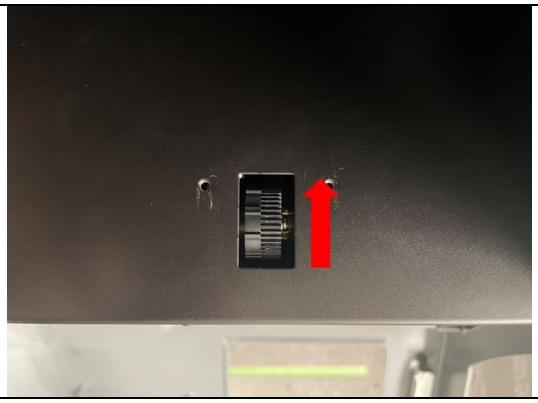

Step 4 / 21

Remove the screws and remove the print head carriage cover.

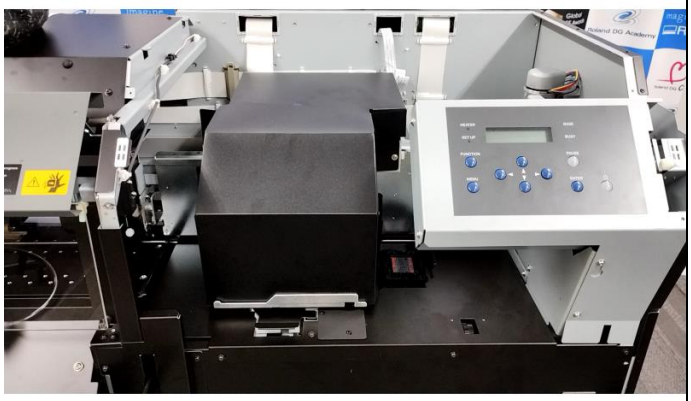

Step 5 / 21

Remove the print carriage board cover.

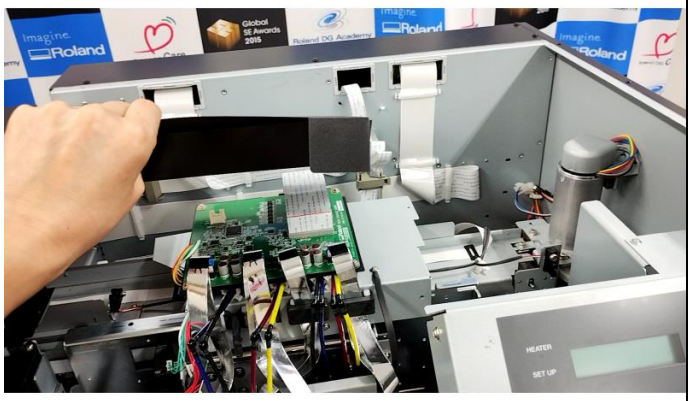

Step 6 / 21

Remove the plate that holds the damper in place.

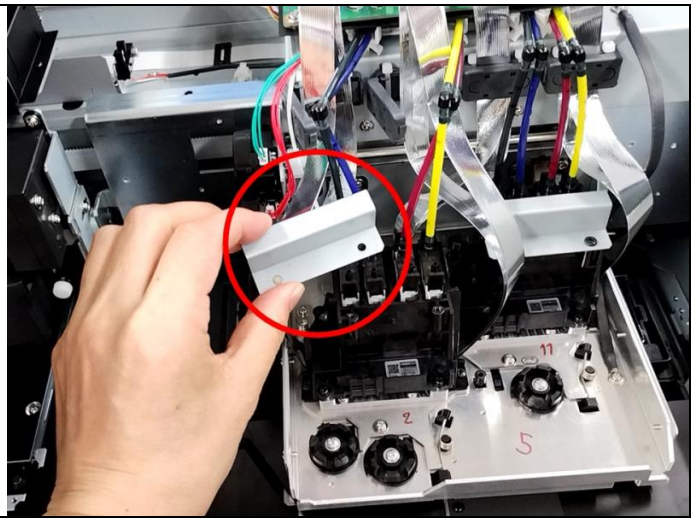

Step 7 / 21

Pull the four dampers out of the print head.

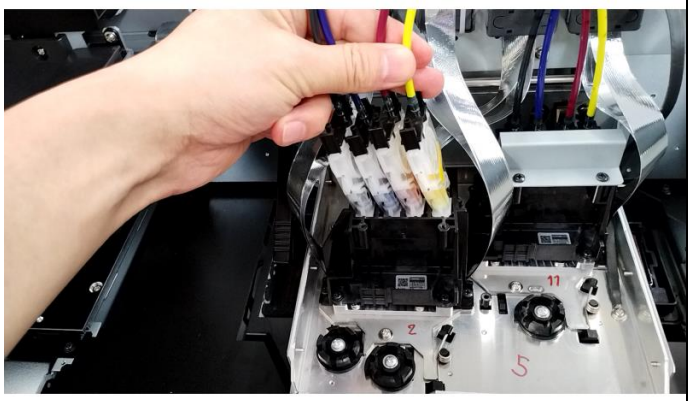

Step 8 / 21

Remove the damper cover.

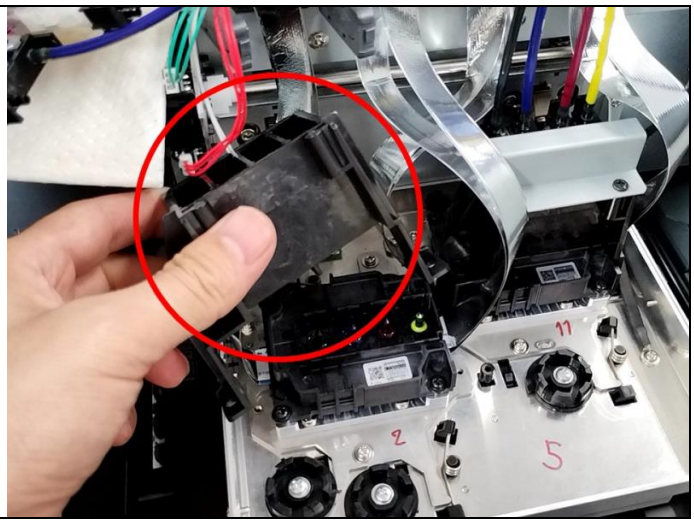

Step 9 / 21

Remove the print head.

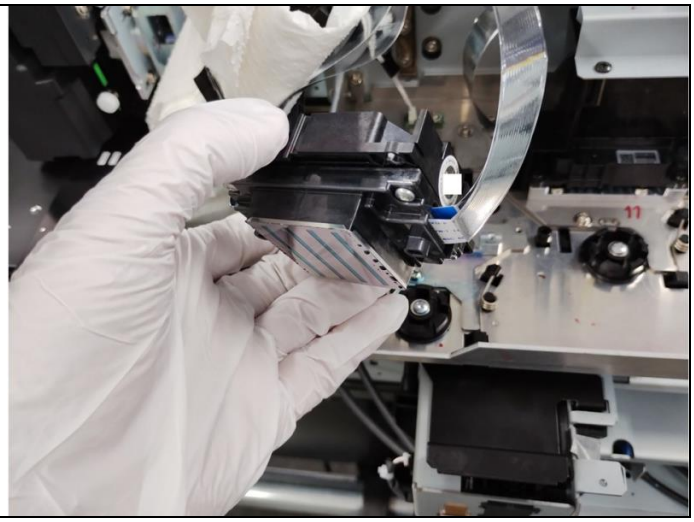

Step 10 / 21

Remove the flex cables on the left and right sides.

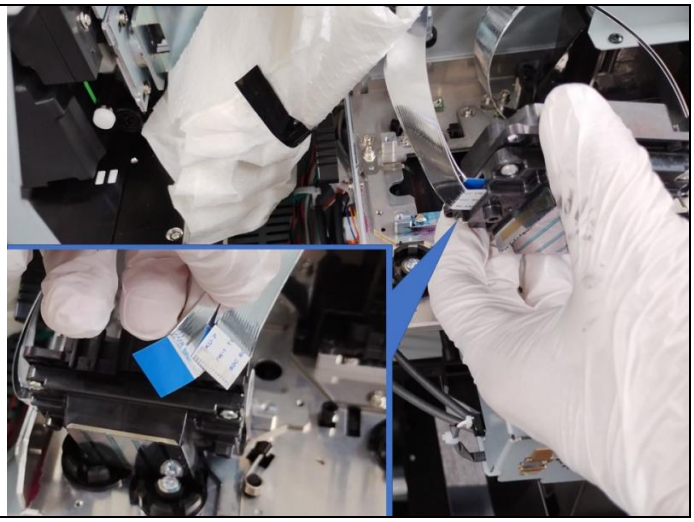

Step 11 / 21

Clean the surface of the new print head with SPG2-CL cleaning liquid.

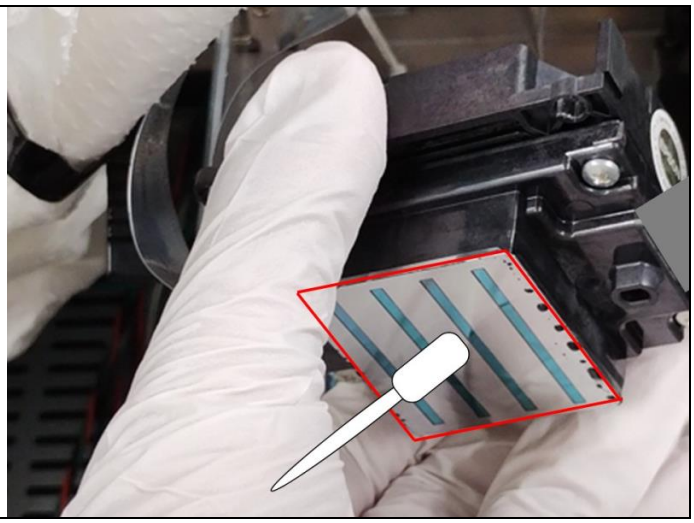

Step 12 / 21

Insert the flex cable into the new print head.

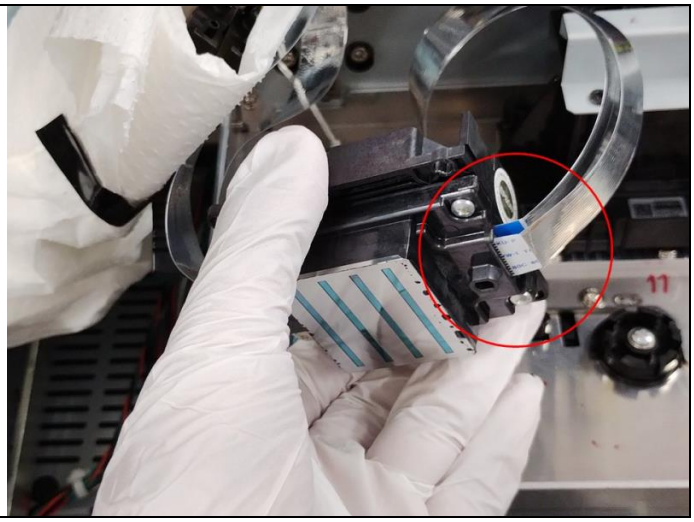

Step 13 / 21

Install the print head.

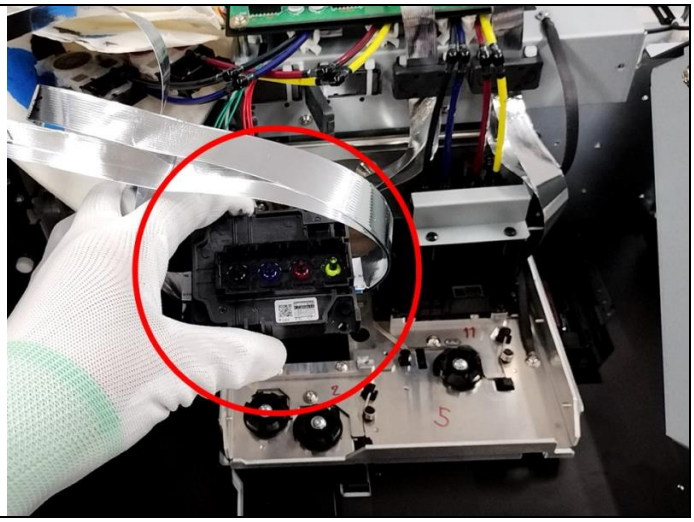

Step 14 / 21

Use a torque screwdriver to fasten the three screws. To tighten the screws, use a 60 cN·m torque driver (ST-056 TORQUE DRIVER N6) and a hex bit (1000006902 TOOL, BIT HEXAGONAL ST-118).

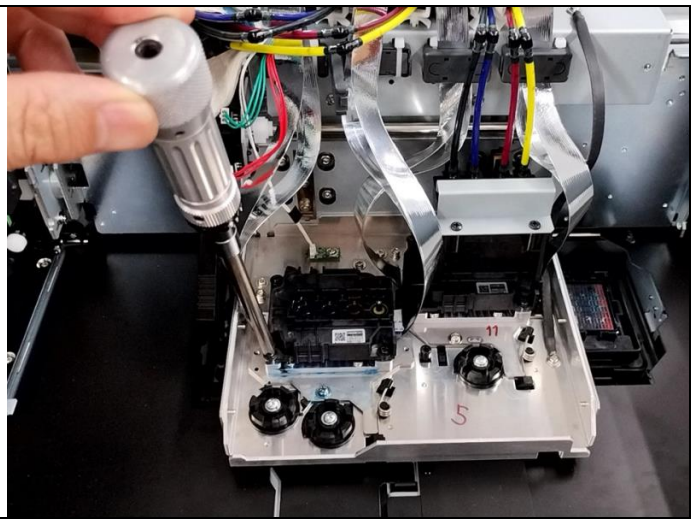

Step 15 / 21

Install the damper cover.

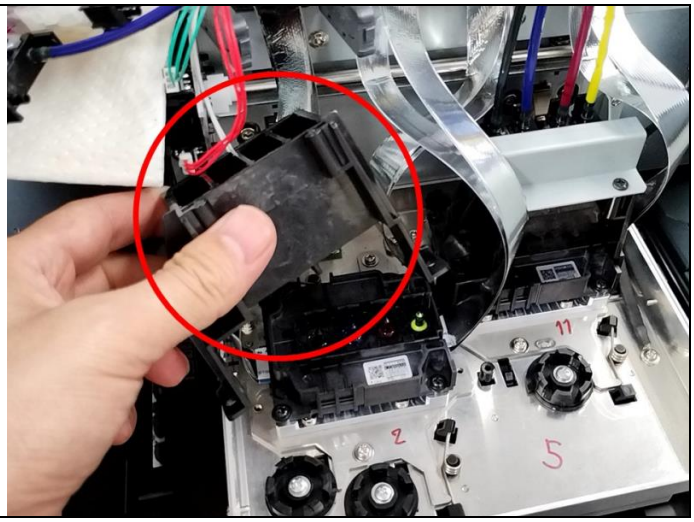

Step 16 / 21

Install the damper.

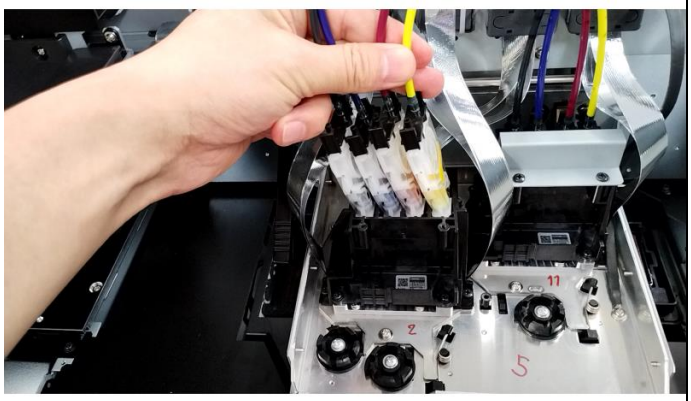

Step 17 / 21

Install the cover that you removed.

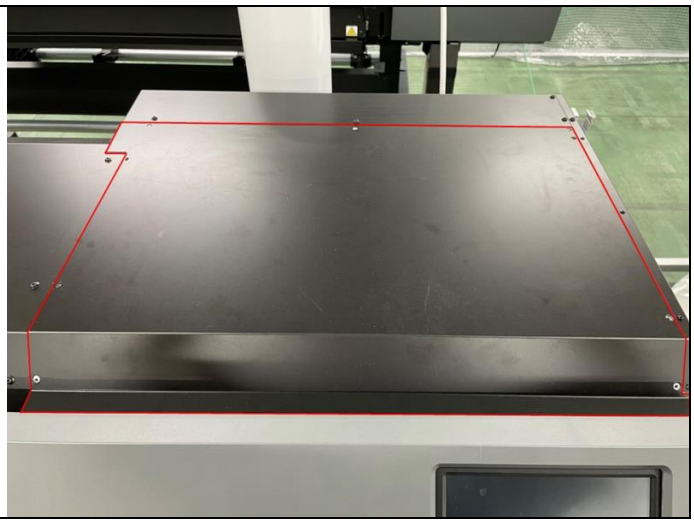

Step 18 / 21

Turn on the main power and enter service mode.

Step 19 / 21

The head rank is automatically registered when the power is turned on. Please check that the new head rank has been entered.

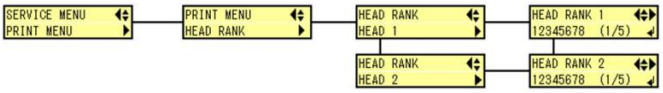

Step 20 / 21

[Firmware Ver.1.10 or later] Perform a head check to ensure that the flex cable is properly connected. Running a head check will automatically clear the print head information.

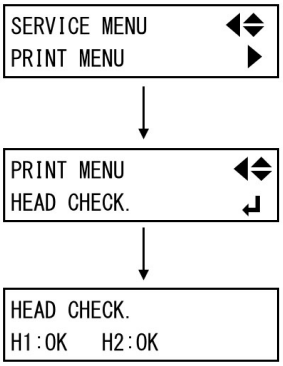

Step 21 / 21

Perform the print head alignment.

次の手順 プリントヘッド位置調整

Next Step Print head alignment

TY-300 Main Board Replacement Procedure

Step 1 / 4

Necessary tools

交換に必要なツール/Necessary tools

Peck2	
プラスドライバー No.2 No.2 Phillips screwdriver	

Step 2 / 4

Special tools

特殊治具/Special Tools

None	

Step 3 / 4

Typical work time

作業内容	時間
メインボード交換（Peck2 でのパラメーターの移し替えが不可能な場合）	40 分
メインボード交換 (Peck 2 でのパラメーターの移し替えが可能な場合）	20 分
Contents of work	**Time**
Main board replacement (When parameters cannot be transferred by Peck2)	40 min.
Main board replacement (When parameters can be transferred by Peck2)	20 min.

Step 4 / 4

To prevent static damage, ground yourself before touching any electronic components. You can discharge static electricity by touching an unpainted metal surface.

TY-300 Main board replacement and adjustment

Step 1 / 34

Start Peck2 and connect the printer from [Connect Printer]. At this time, the printer parameters will be automatically downloaded to the specified folder.

Step 2 / 34

[Details 1] Click the [Login] button.

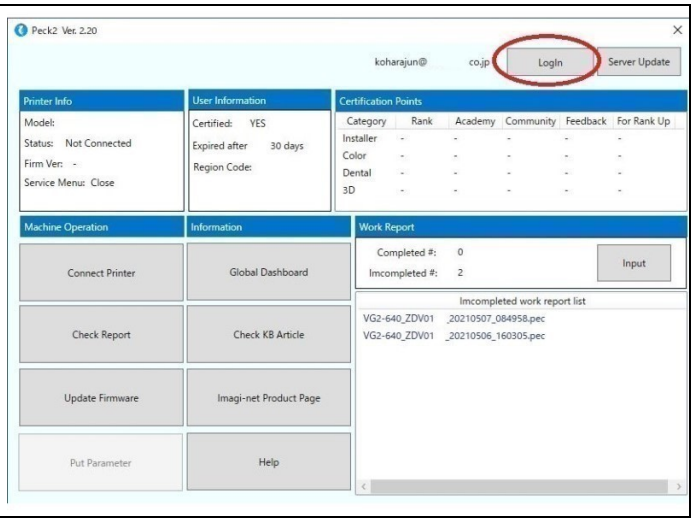

Step 3 / 34

[Details 2] Log in with your Imagi-net ID.

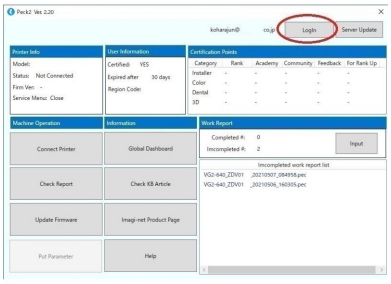

Step 4 / 34

[Details 3] Click the [Connect Printer] button.

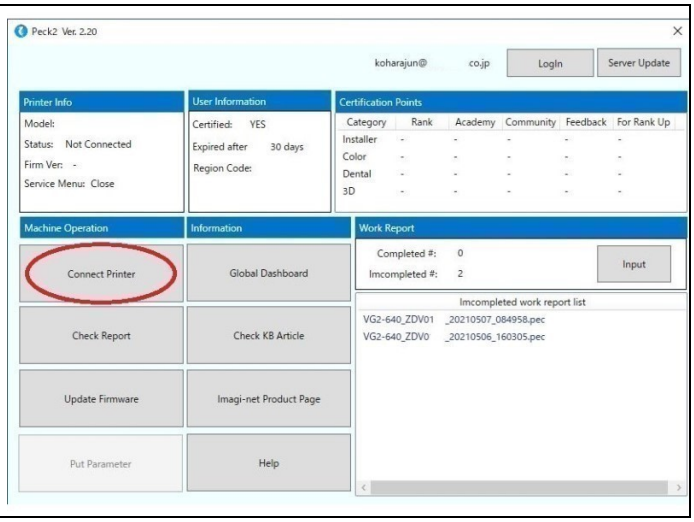

Step 5 / 34

[Details 4] Enter the IP address of the machine you want to connect to.

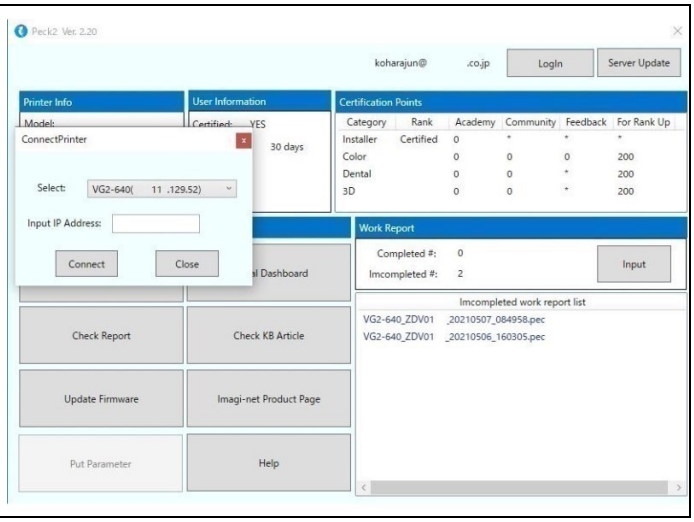

Step 6 / 34

[Details 5] When you can connect to the printer, printer information will be displayed in [Printer Info].

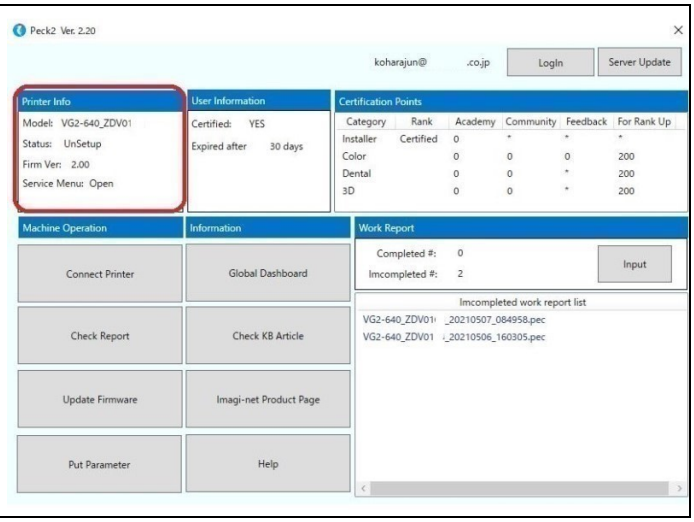

Step 7 / 34

[Details 6] Once you have connected to the printer, the parameters will be automatically acquired. Click the [Put Parameter] button, check the serial number and the date and time of the file name, and confirm that the parameters have been acquired correctly. After checking, return to the home screen without opening the file.

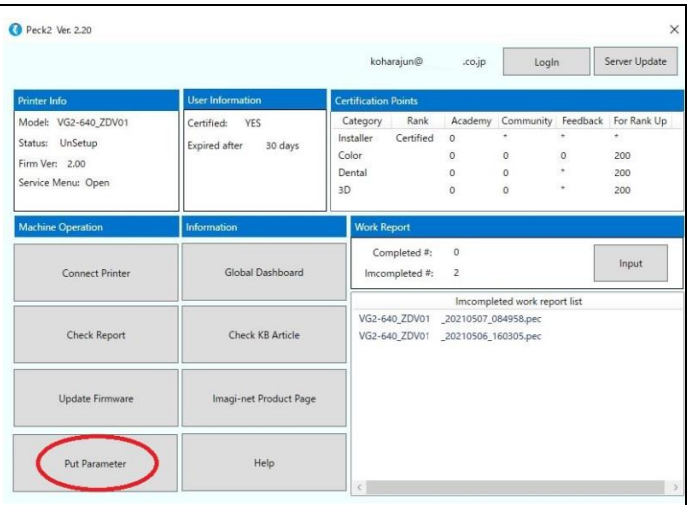

Step 8 / 34

[Details 7] Check the retrieved file.

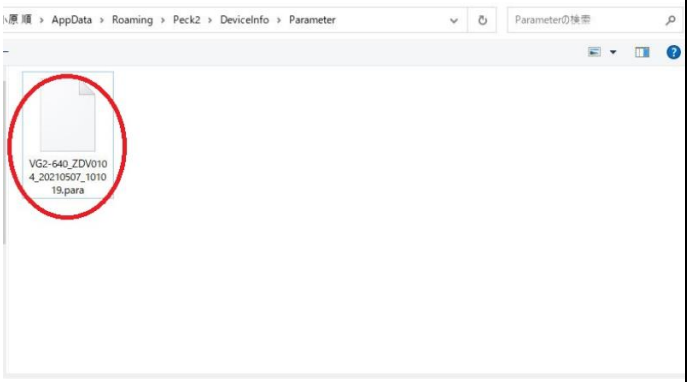

Step 9 / 34

Turn off the power and unplug the power cable.

Step 10 / 34

Remove the cover.

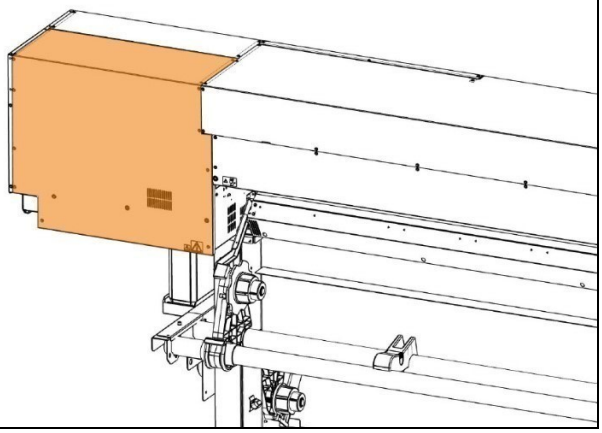

Step 11 / 34

Disconnect the connectors and remove the main board.

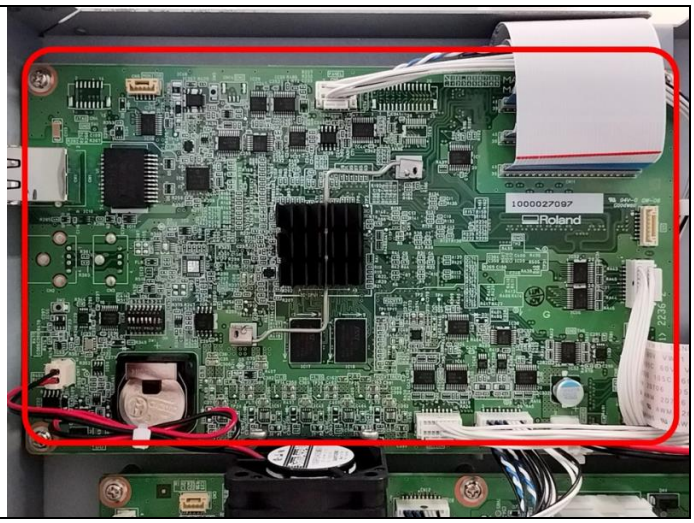

Step 12 / 34

Set DIP SW 2 and 3 on the new main board to ON.

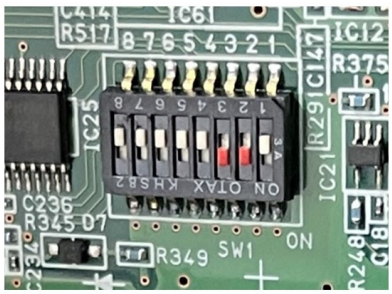

1	2	3	4	5	6	7	8
OFF	**ON**	**ON**	OFF	OFF	OFF	OFF	OFF

Step 13 / 34

Install the new main board.

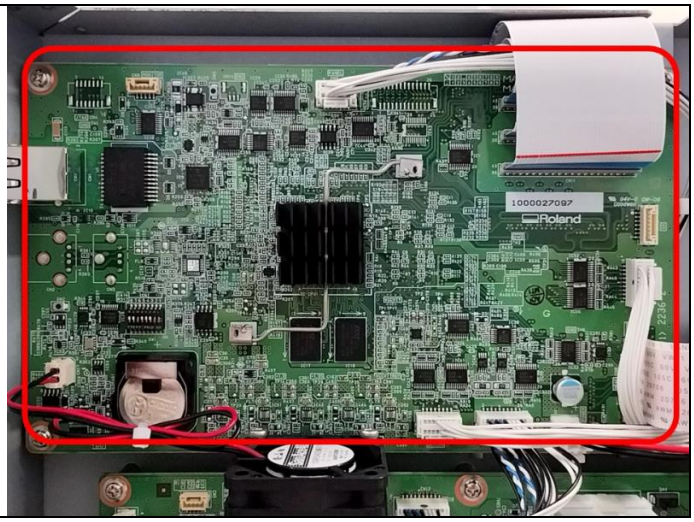

Step 14 / 34

Install the removed battery into the new main board.

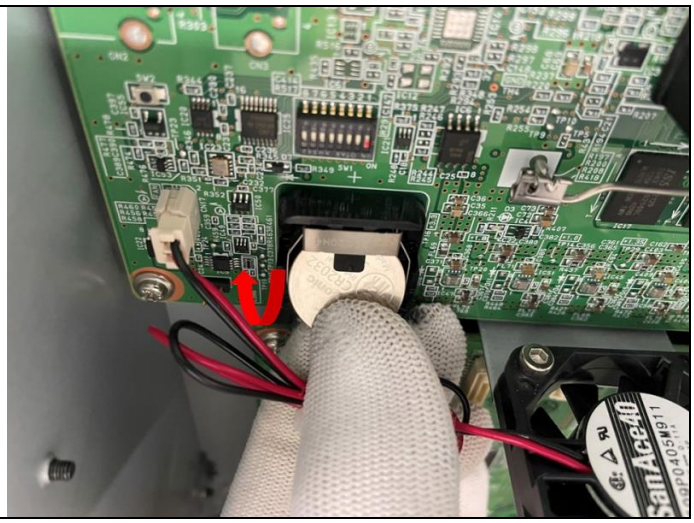

Step 15 / 34

Reinstall any connectors or cover that you removed.

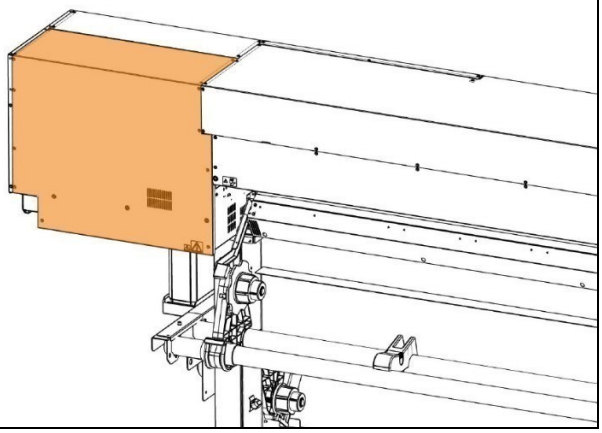

Step 16 / 34

Set the date and time.

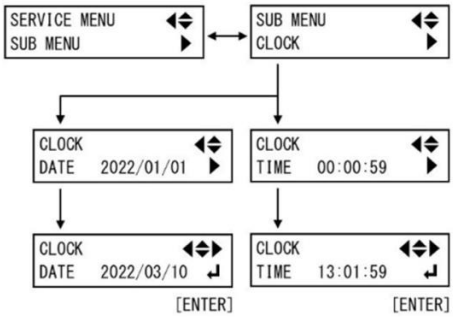

Step 17 / 34

Put □□□□□□□□□□□□□□

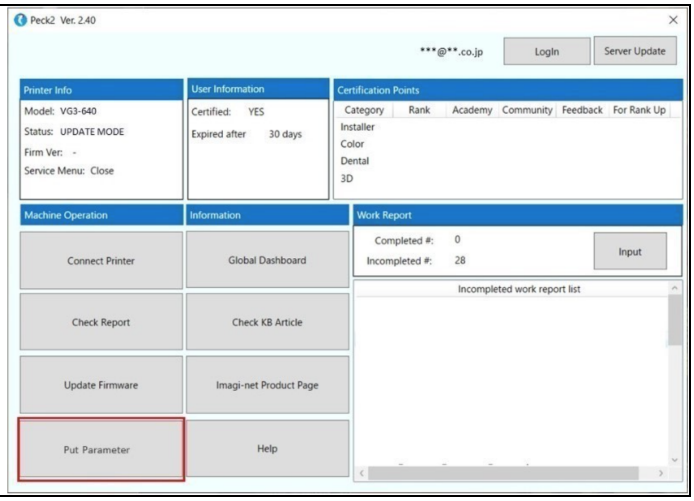

Step 18 / 34

[When the parameters can be transferred by Peck2] Follow the instructions in Firmware Installation to install the firmware and parameters to the printer. This completes the work.

Step 19 / 34

[When the parameters cannot be transferred by Peck2] Carry out [Firmware Installation]. After installing the firmware, follow the instructions from the next pages.

Step 20 / 34

□□□□□□□□□□□□□□□□ [□□]□[YYYYY/MM/DD]□□□□□□□□□□

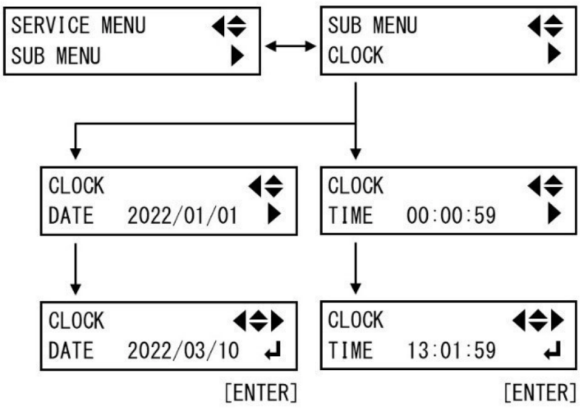

Step 21 / 34

Initialize the system parameters.

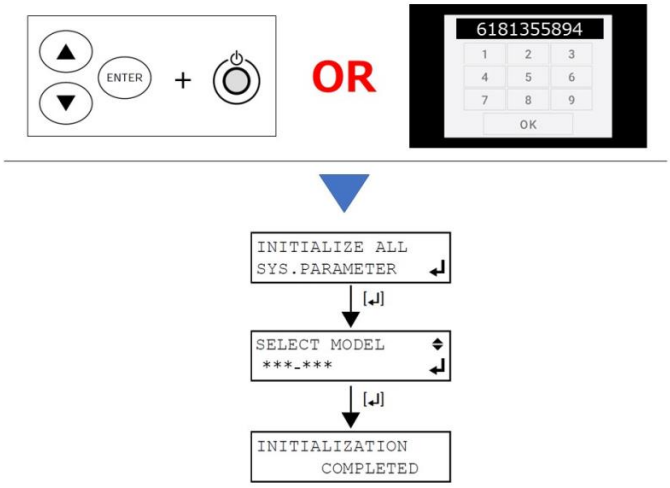

Step 22 / 34

Enter temporary IP address mode.

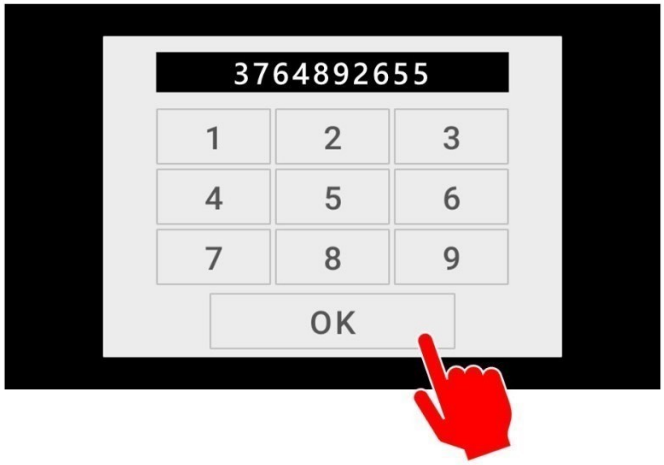

Step 23 / 34

Connect Peck2 to the printer and enter service mode.

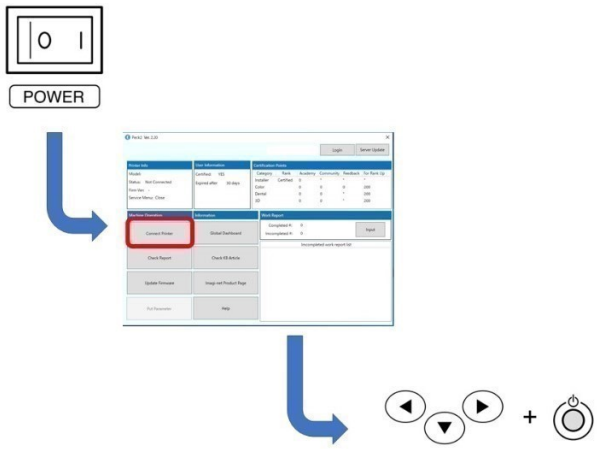

Step 24 / 34

Go to the user menu and set the IP address.

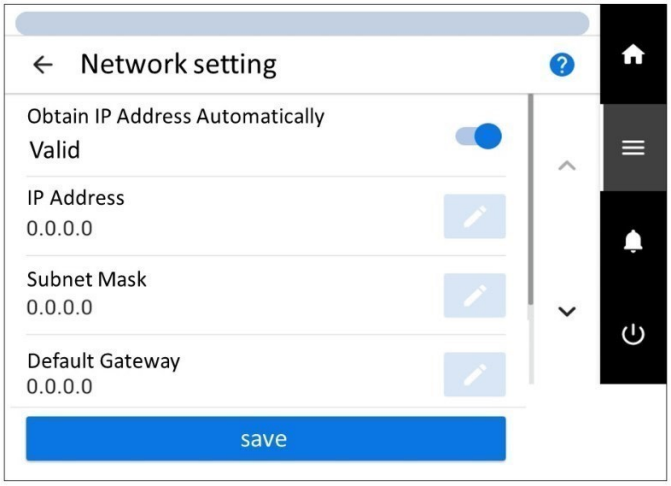

Step 25 / 34

Set the language and units.

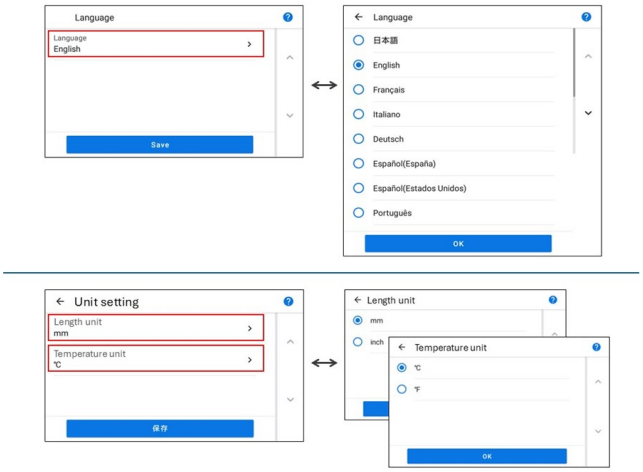

Step 26 / 34

Enter the serial number.

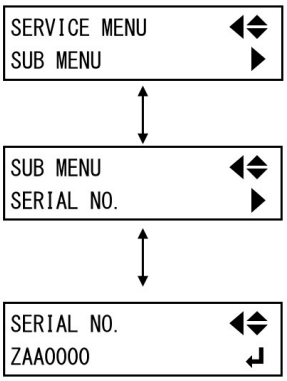

Step 27 / 34

Set the ink type.

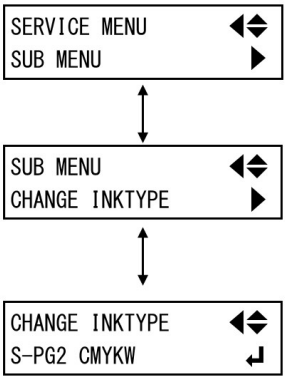

Step 28 / 34

Adjust the limit position.

次の手順

リミット位置調整

Next Step

Limit Position Adjustment

Step 29 / 34

Adjust the wiper position.

次の手順

ワイパー位置設定

Next Step

Wiper position setting

Step 30 / 34

Adjust the head position. Adjust only Horizontal and M-GAP DEFAULT.

次の手順

ヘッド位置調整

Next Step

Print head alignment

Step 31 / 34

Perform feed calibration.

次の手順 距離補正

Next Step Feed calibration

Step 32 / 34

Perform multi-sensor adjustment.

次の手順 マルチセンサー調整

Next Step Multi Sensor Adjustment

Step 33 / 34

Perform crop cut adjustment.

次の手順 クロップカット調整

Next Step Crop cut adjustment

Step 34 / 34

Adjust the print/cut position.

次の手順 プリント/ カット位置調整

Next Step Print/cut position adjustment

TY-300 Firmware Installation Information

Step 1 / 2

Necessary tools

一般ツール/General Tool

無し None	

特殊治具/Special Tools

無し None	

Step 2 / 2

Typical work time

作業時間/Typical work time

作業内容/Contents of work	時間/Time
ファームウエアインストール Firmware file installation	15 min.

TY-300 Firmware installation procedure

Step 1 / 17

Enter "3764892655" in the special number input mode to enter temporary IP mode.

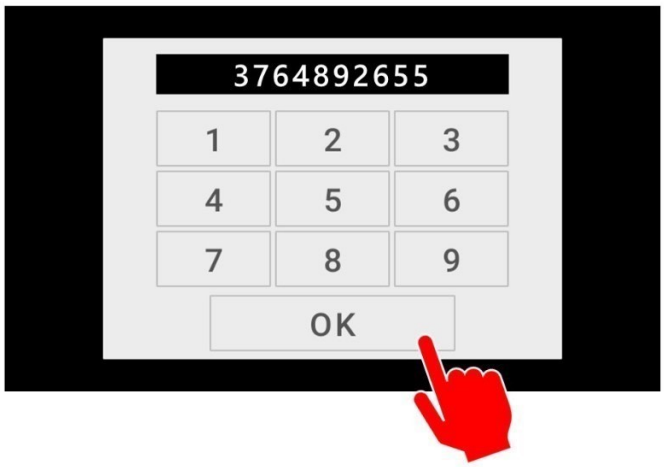

Step 2 / 17

When a temporary IP address is set, the network settings will be temporarily set to 192.168.1.99/255.255.255.0/0.0.0.0.

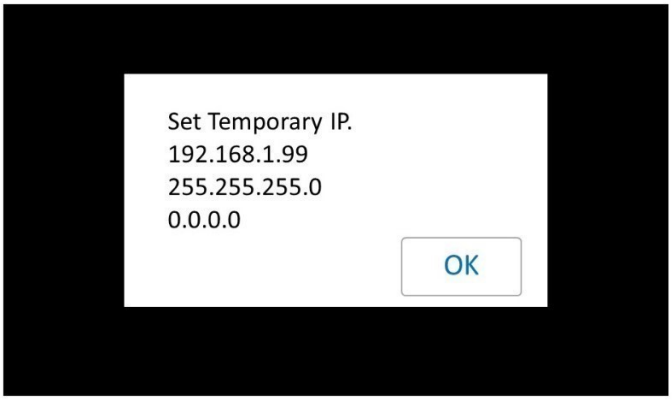

Step 3 / 17

Connect Peck2 and the printer with the temporary IP address and enter service mode.

Step 4 / 17

From the special number input mode, enter "1641569833" to enter the UPDATE FIRMWARE mode.

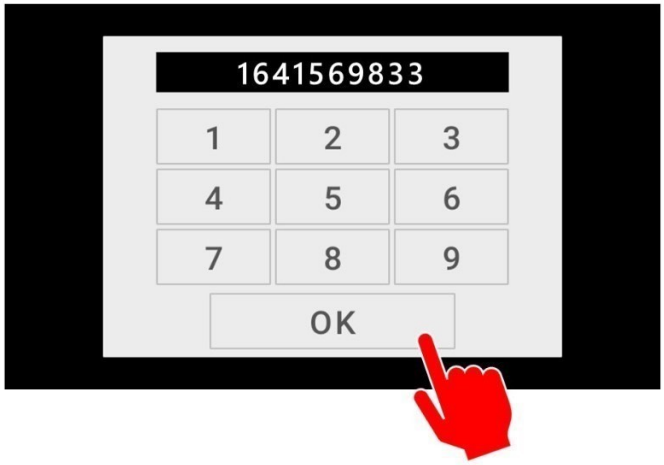

Step 5 / 17

Press [Enter] on the service mode screen to display the Network settings Information screen.

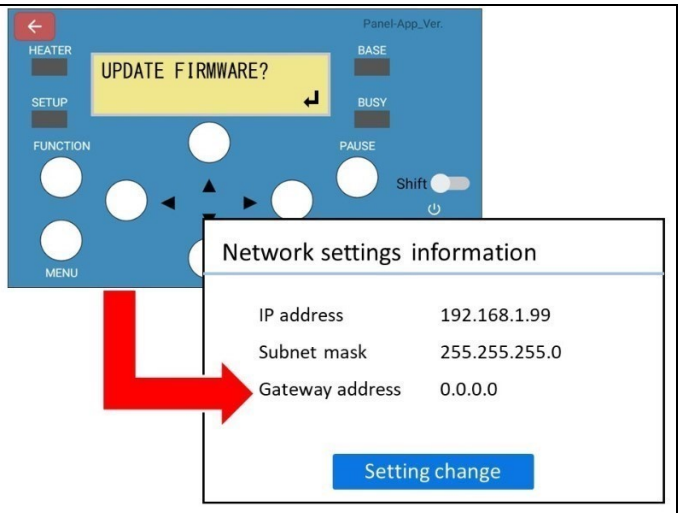

Step 6 / 17

Press the [Update Firmware] button and select the firmware to install.

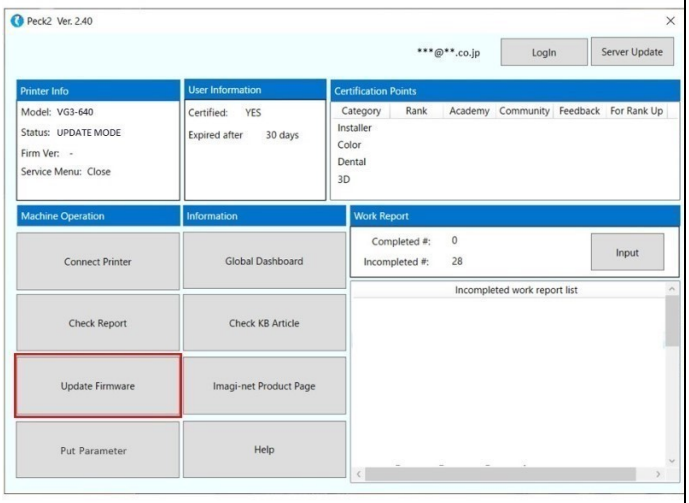

Step 7 / 17

The firmware installation will begin, please wait about 5 minutes until the installation is complete.

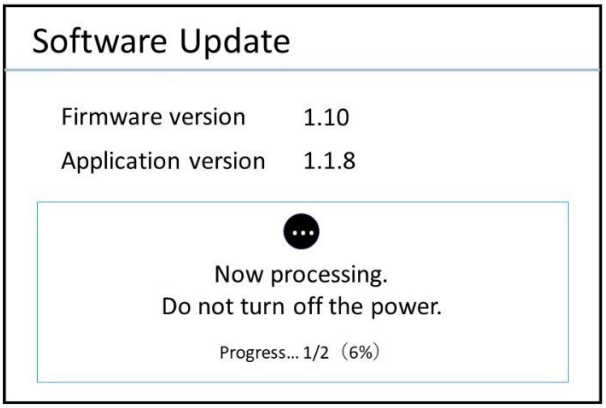

Step 8 / 17

From the special number input mode, enter "6181355894" to enter system parameter initialization mode.

Step 9 / 17

Use the □][□] keys to select the model, and then press the [ENTER] key to execute the initialization. When the initialization is complete, the sub power will automatically turn off.

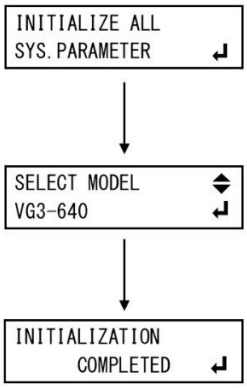

Step 10 / 17

Enter "3764892655" in the special number input mode to enter the temporary IP address mode.

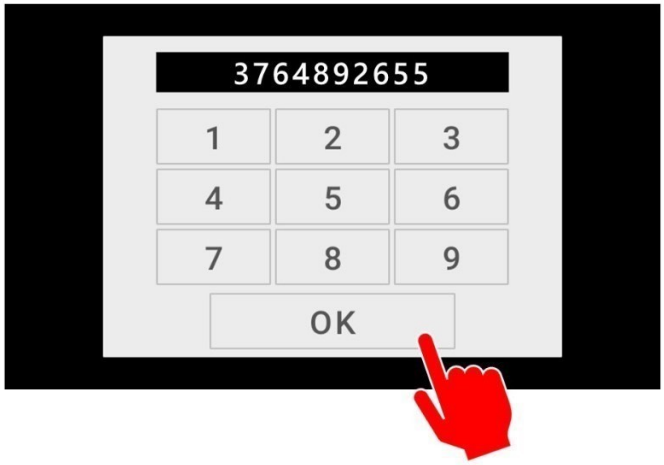

Step 11 / 17

When a temporary IP address is set, the network settings will be temporarily set to 192.168.1.99/255.255.255.0/0.0.0.0.

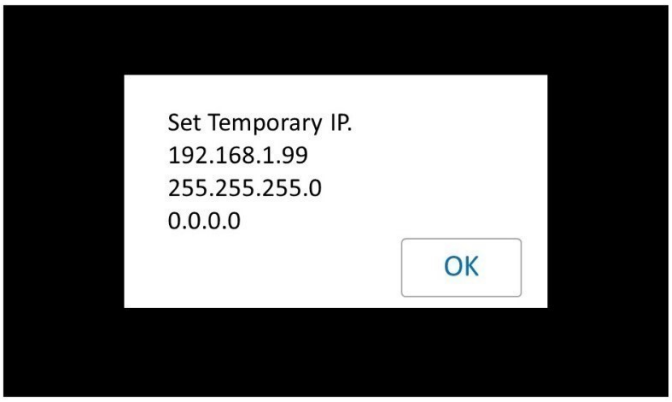

Step 12 / 17

Connect Peck2 and the printer with the temporary IP address and enter service mode.

Step 13 / 17

Click the [Put Parameter] button to transfer the system parameters to the printer.

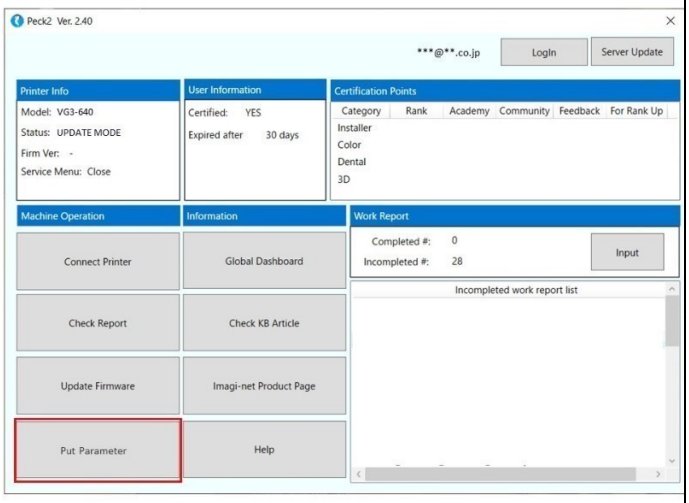

Step 14 / 17

Click the [Check Report] button to get the Peck report for the machine. Check the contents to confirm that the parameters were written correctly.

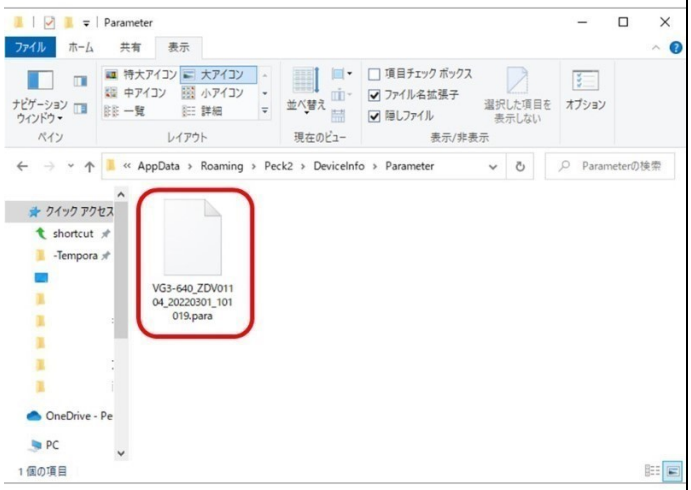

Step 15 / 17

The network settings you have set will be overwritten with the addresses saved in the system parameters by executing [Put Parameter]. If necessary, set them again.

Step 16 / 17

Set the date and time.

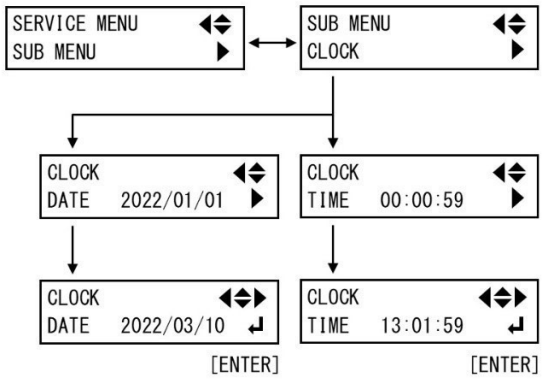

Step 17 / 17

If you are unable to transfer the parameters, please refer to [When parameters cannot be transferred by Peck2] in the main board replacement section.

TY-300 Firmware Update Information

Step 1 / 2

Necessary tools

一般ツール/General Tool

無し None	

特殊治具/Special Tools

無し None	

Step 2 / 2

Typical work time

作業時間/Typical work time

作業内容/Contents of work	時間/Time
ファームウエアアップグレード Firmware Upgrade	10 min.

TY-300 Firmware Update Procedure

Step 1 / 5

Check the printer's IP address.

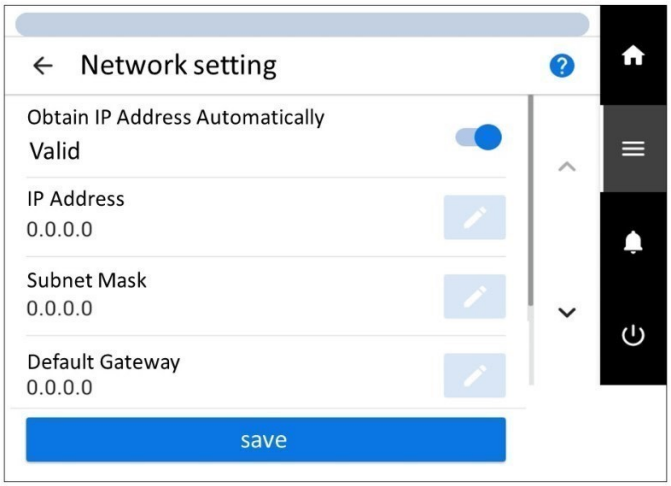

Step 2 / 5

Turn off the sub power.

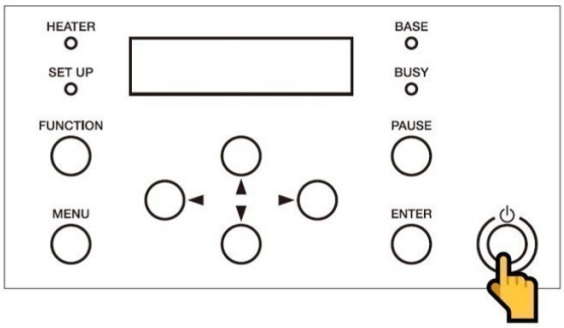

Step 3 / 5

Connect Peck2 to the machine and enter service mode.

Step 4 / 5

Press the [Update Firmware] button and select the firmware, and the firmware will be transferred to the printer.

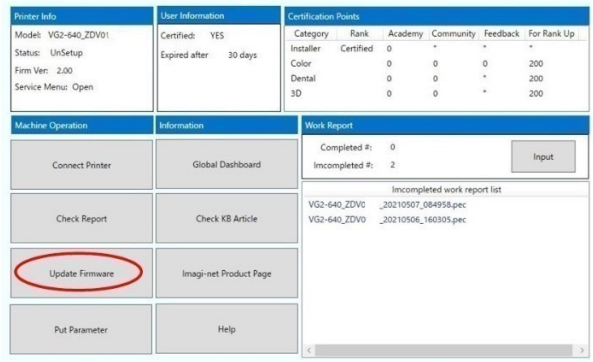

Step 5 / 5

The machine will automatically enter Firmware Upgrade mode, and when the upgrade is complete, the sub power will be turned off automatically. The upgrade will take more than 5 minutes.

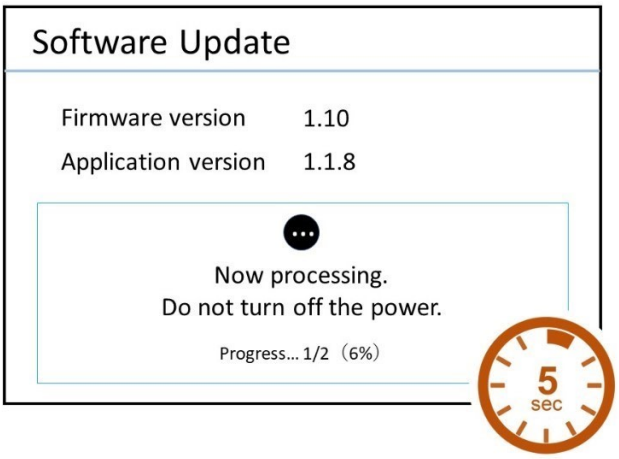

TY-300 Limit Position Adjustment Information

Step 1 / 2

Necessary tools

一般ツール/General Tool

無し None	

特殊治具/Special Tools

無し None	

Step 2 / 2

Typical work time

作業時間/Typical work time

作業内容/Contents of work	時間/Time
リミット位置調整 Limit position adjustment	15 min.

TY-300 Limit position initialization procedure

Step 1 / 3

Enter limit position initialization mode.

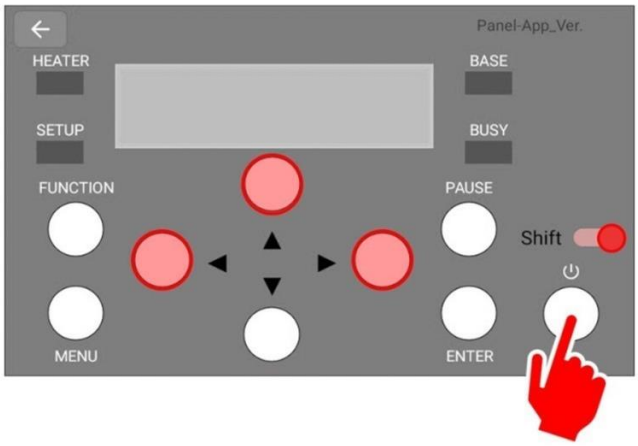

Step 2 / 3

Lock the print head carriage. After locking the carriage, push it to the left to check that it is locked and remove any play.

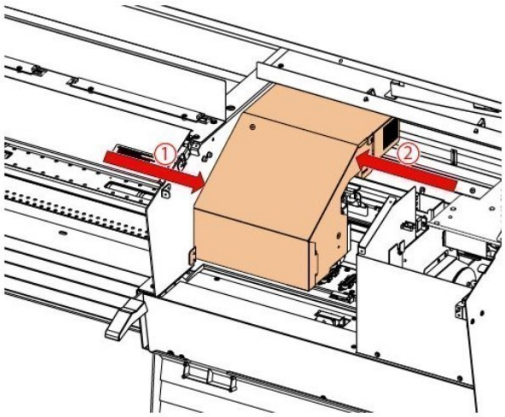

Step 3 / 3

Make sure the cap is in the correct position and press the [ENTER] key. When limit initialization is complete, a

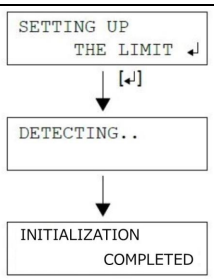

completion message will be displayed.

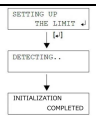

TY-300 Print head position adjustment

TY-300 Print Head Alignment Information

Step 1 / 3

Necessary tools

Step 2 / 3

Special tools

Step 3 / 3

Standard Work Hours

TY-300 Print head alignment procedure

Step 1 / 25

Connect Peck2 to the machine and enter service mode.

Step 2 / 25

Load the media into the printer and set it up.

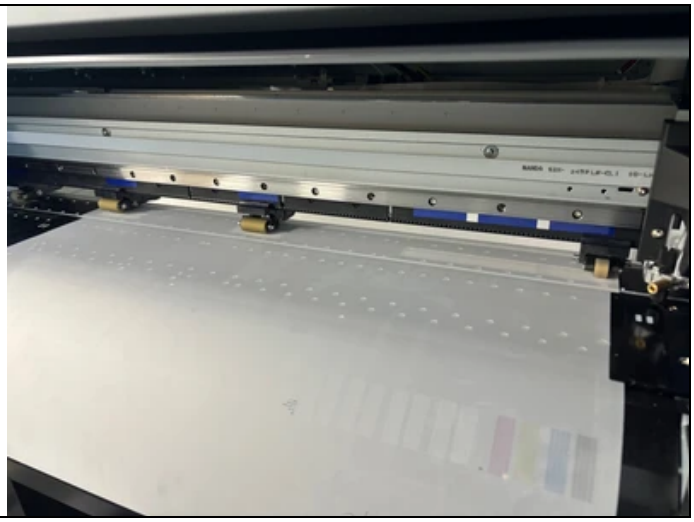

Step 3 / 25

Select [PRINT MENU] > [HEAD ADJUST] > [BIAS/VERTICAL] > [TEST PRINT] and press the [ENTER] key.

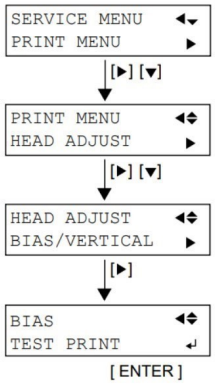

Step 4 / 25

Check the test pattern. If the displacement between the reference line and the adjustment line is within 0.25 dots, no adjustment is necessary. If not, please adjust.

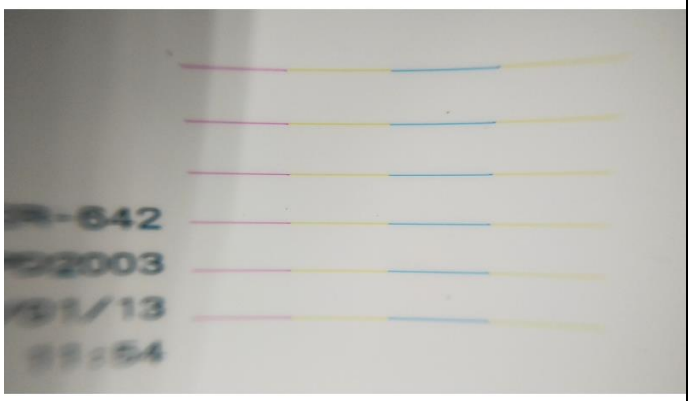

Step 5 / 25

The following are the steps to adjust the BIAS.

Step 6 / 25

Remove the right top cover and the print head carriage cover.

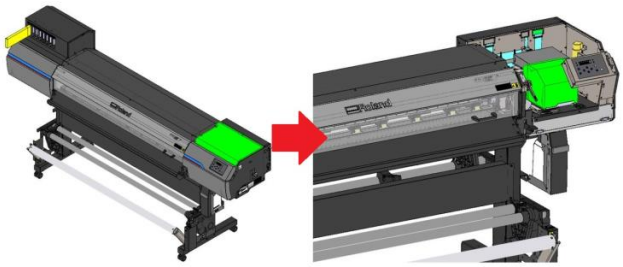

Step 7 / 25

The top row of the test print is adjusted using the right-side print head tilt adjustment dial, and the bottom row of the test print is adjusted using the left-side print head tilt adjustment dial.

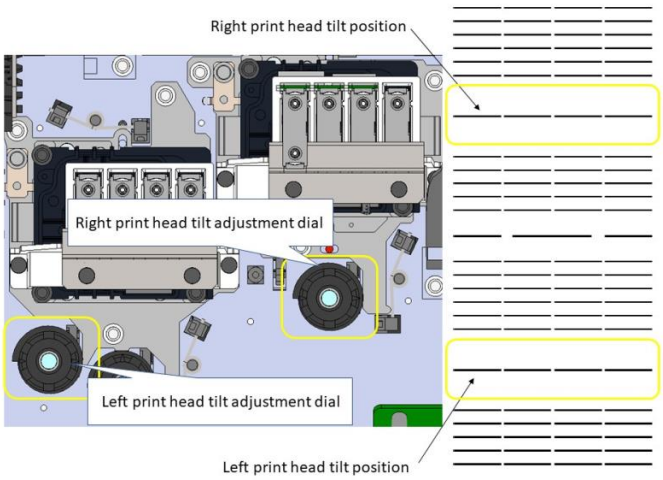

Step 8 / 25

Loosen the screws one turn in the order of the numbers. When adjusting the right print head, loosen them in the same order.

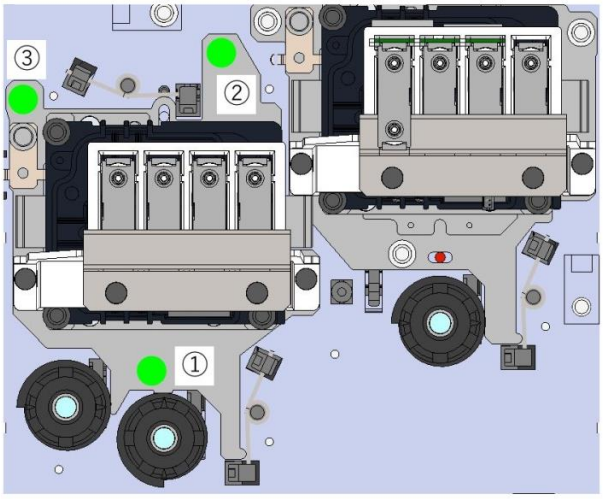

Step 9 / 25

If the left side of the left print head tilt position line is up and the right side is down: Turn the dial to the right to adjust the dots in the horizontal line to within 1/4 dot displacement. (One click of the dial moves the dots 2.9 micrometers. One dot is 57 micrometers.)

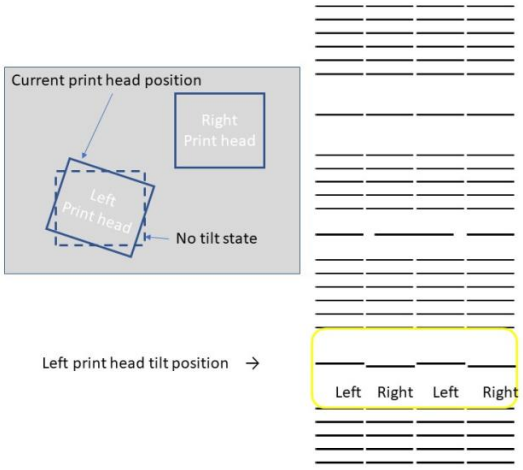

Step 10 / 25

If the left side of the left print head tilt position line is down and the right side is up: Turn the dial to the left to adjust the dots in the horizontal line to within 1/4 dot deviation. (One click of the dial moves the dots 2.9 micrometers. One dot is 57 micrometers.)

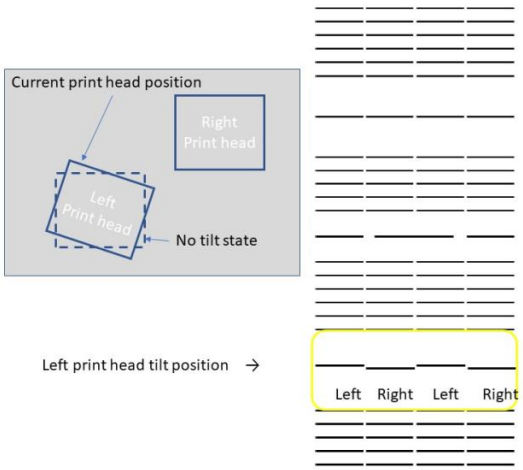

Step 11 / 25

Use a 0.6 N·m torque wrench to tighten the screws in the order of the numbers.

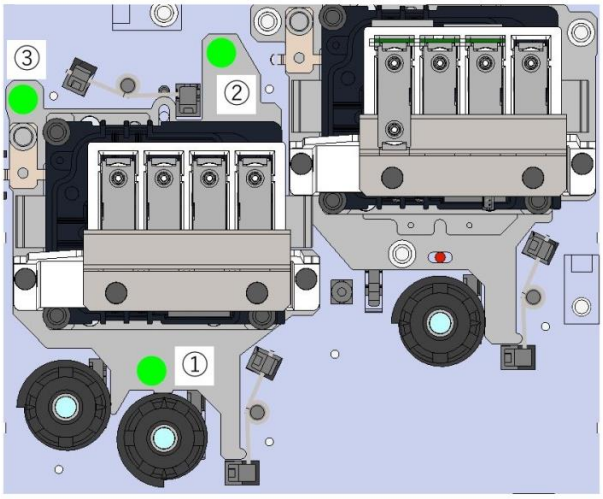

Step 12 / 25

Adjust the inclination of the right print head in the same way.

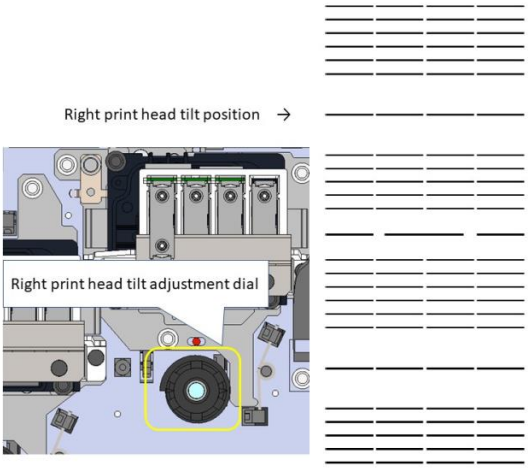

Step 13 / 25

The following are the steps for making VERTICAL adjustments.

Step 14 / 25

Figure: Print head front/rear adjustment dial

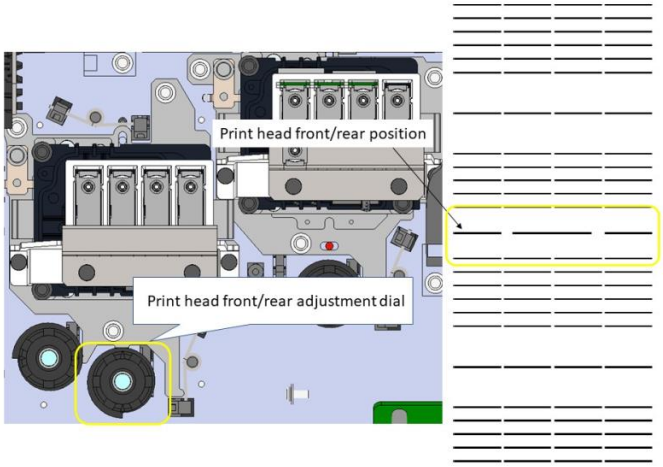

Step 15 / 25

Loosen the screws one turn in the order of the numbers.

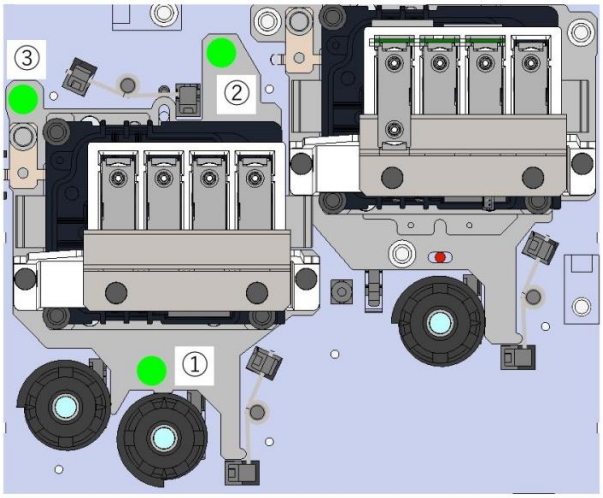

Step 16 / 25

If the center line is below the outer lines: Turn the dial to the right to adjust the dots on the horizontal line to within 1/4 dot displacement. (One click of the dial moves the dots 12.2 micrometers. One dot is 57 micrometers.)

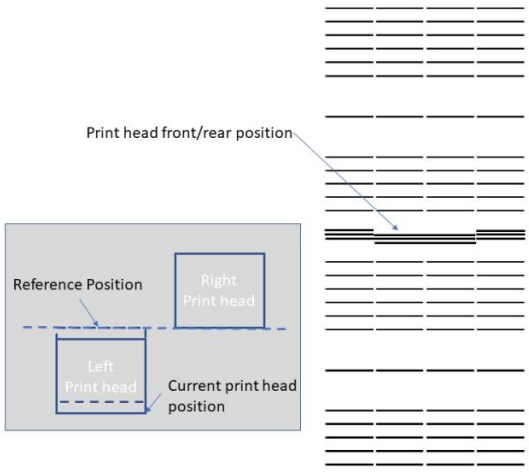

Step 17 / 25

If the center line is above the outer lines: Turn the dial to the left to adjust the dots on the horizontal line to within 1/4 dot displacement. (One click of the dial moves the dots 12.2 micrometers. One dot is 57 micrometers.)

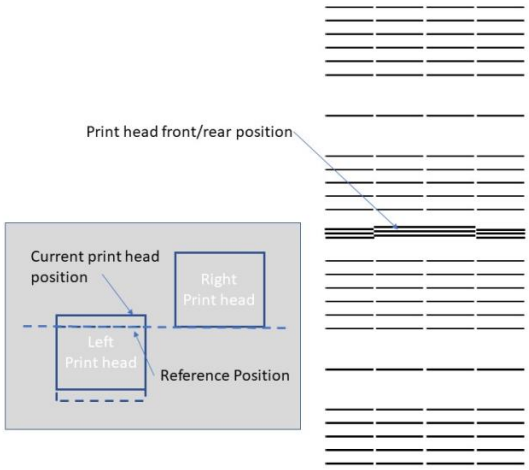

Step 18 / 25

Use a 0.6 N·m torque wrench to tighten the screws in the order of numbers.

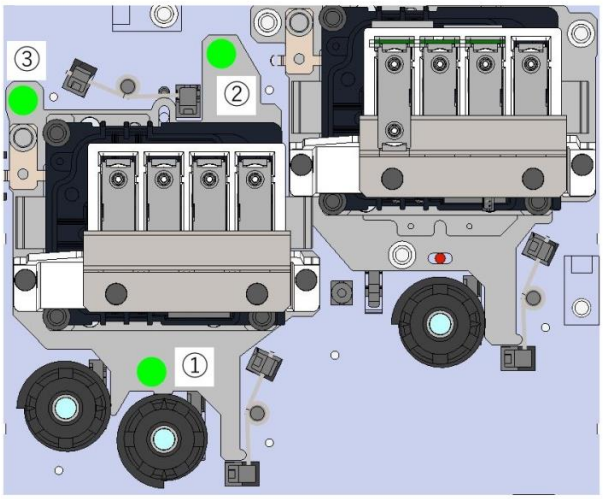

Step 19 / 25

Install the cover.

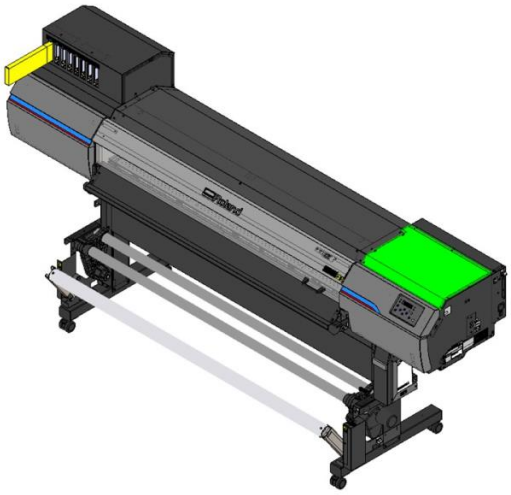

Step 20 / 25

The following are the steps to make the M-GAP adjustment.

Step 21 / 25

Select [PRINT MENU] > [HEAD ADJUST] > [M-GAP DEFAULT] > [TEST PRINT] and press the [ENTER] key.

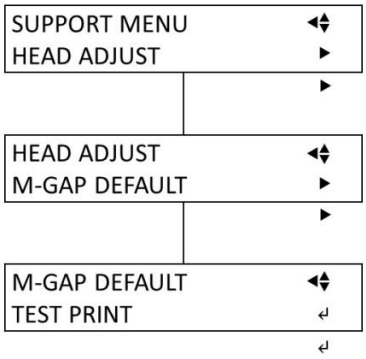

Step 22 / 25

Check the test pattern. Enter the number where the upper and lower black lines overlap into the printer and press [ENTER].

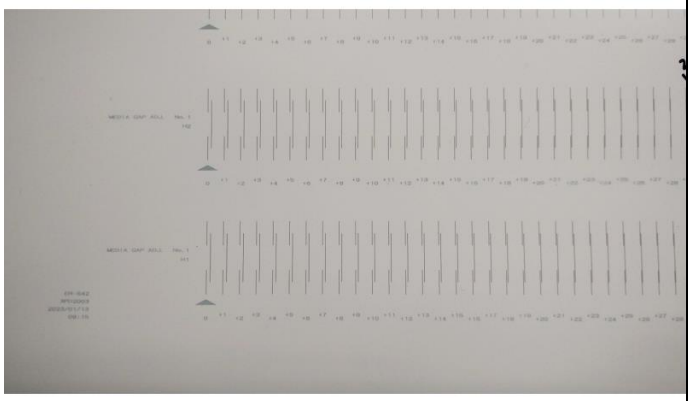

Step 23 / 25

The following are the steps for making HORIZONTAL adjustments.

Step 24 / 25

Select [PRINT MENU] > [HEAD ADJUST] > [HORIZONTAL] > [TEST PRINT] and press the [ENTER] key.

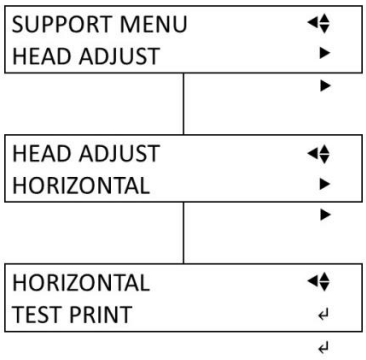

Step 25 / 25

Check the test pattern. Enter the number where the upper and lower black lines overlap into the printer and press [ENTER].

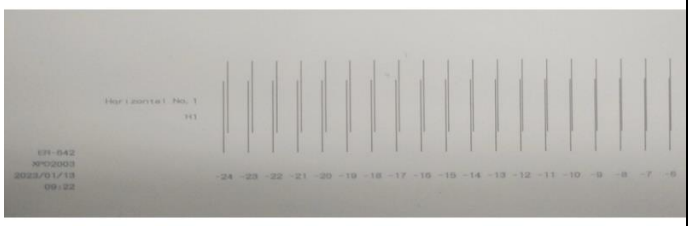

TY-300 Belt Tension Adjustment Information

Step 1 / 3

Necessary tools

一般ツール/General Tool

プラスドライバー No.2 No.2 Phillips screwdriver	
六角レンチ 3.0mm 3.0mm hexagonal wrench	
スケール（定規） Ruler	

Step 2 / 3

Special tools

特殊治具/Special Tools

ST-001 TENSION GAUGE 2000GF/2000CN	

Step 3 / 3

Typical work time

作業時間/Typical work time

作業内容/Contents of work	時間/Time
ベルトテンション調整 Belt Tension Adjustment	40 min.

TY-300 Belt tension adjustment procedure

Step 1 / 12

Open the left and right maintenance covers.

Step 2 / 12

After locking the print head carriage, push the carriage to the left to check that it is locked and remove any play.

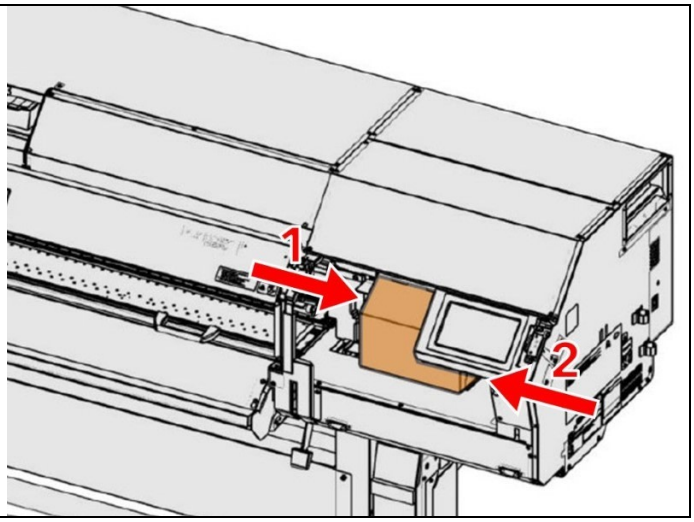

Step 3 / 12

Measure the belt tension at the center of the second pinch roll from the right. The belt tension is measured when the underside of the belt is raised 35 mm above the rail mounting plate. If the

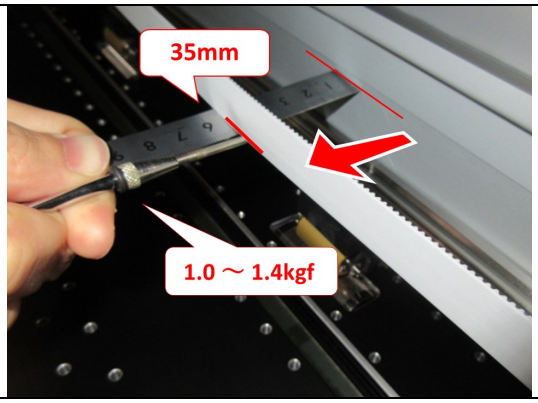

measured value is within the range (1.0 to 1.4 kgf), the tension is considered to be appropriate.

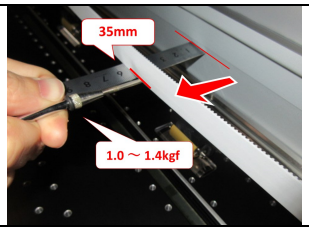

Step 4 / 12

If the measurement is out of range, proceed to the next step. If the measured value is within the range, the procedure is complete. Adjust the belt position.

測定結果/Measurement Result

測定値 /Measurement Result	判定 /Judge	次の作業 /Next step
～ 0.99 kgf	✕	Not appropriate value To the next step
1.0 kgf ～ 1.4 kgf	○	Appropriate value To Belt Position Adjustment
1.41kgf ～	✕	Not appropriate value To the next step

Step 5 / 12

When turning the screws, be careful of any protruding objects in the surrounding area, as you may injure your hands.

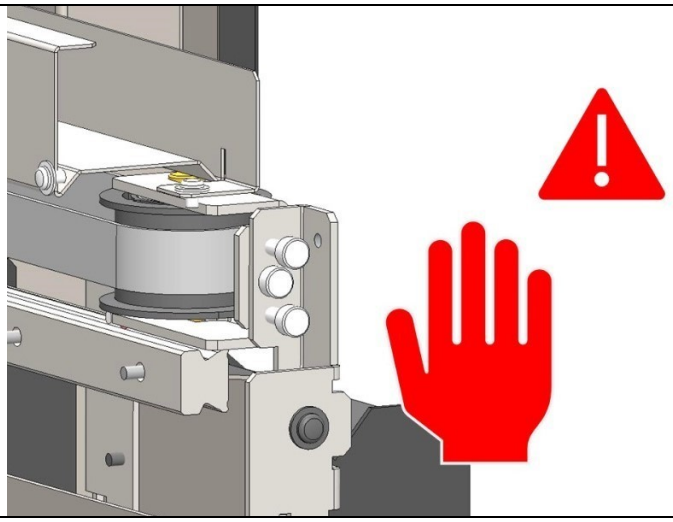

Step 6 / 12

Loosen the fixing screws (2 places) on the left end of the belt by about 1/2.

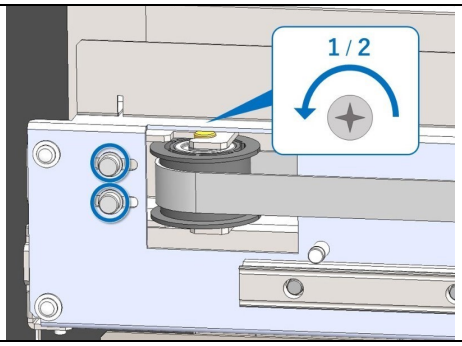

Step 7 / 12

Loosen the adjustment screws (2 places) about 3 turns to create a gap of about 3 mm between the tip of the screw and the idle pulley holder. If they are touching, no more tension can be applied.

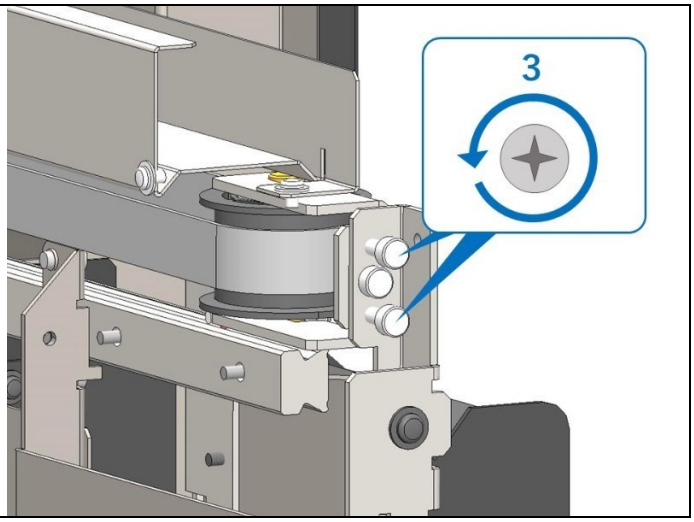

Step 8 / 12

Turn the adjustment screw and adjust the tension so that the tension gauge value is within the appropriate range using the specified measurement method.

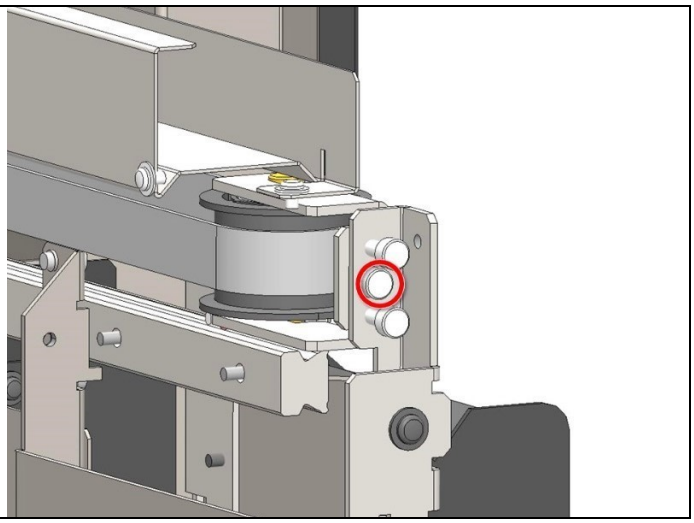

Step 9 / 12

Tighten the fixing screws (2 places).

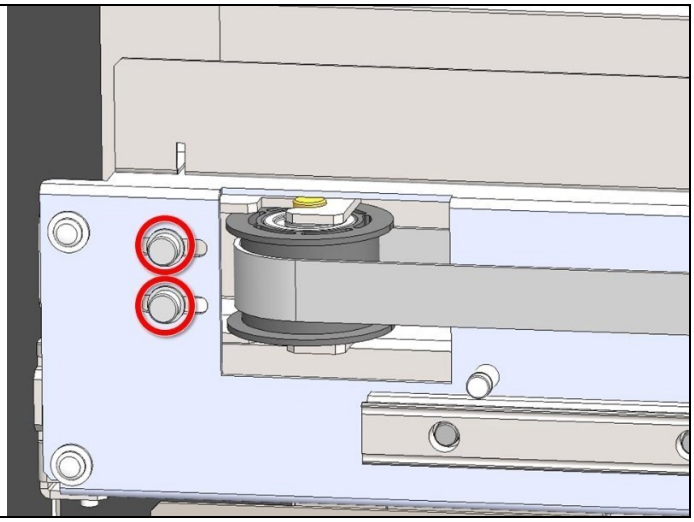

Step 10 / 12

Check again to make sure the tension is within the proper range.

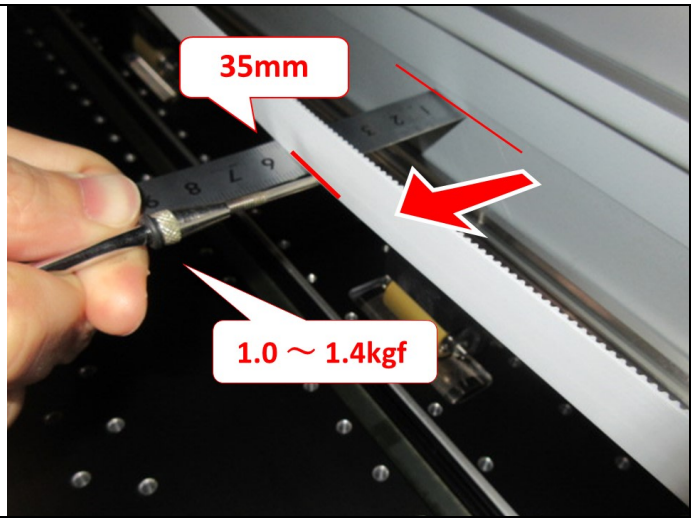

Step 11 / 12

Tighten the adjustment screws (2 places) until they lightly touch the idle pulley holder. Be careful not to tighten them too much, as this may cause the fixed idle pulley holder to move.

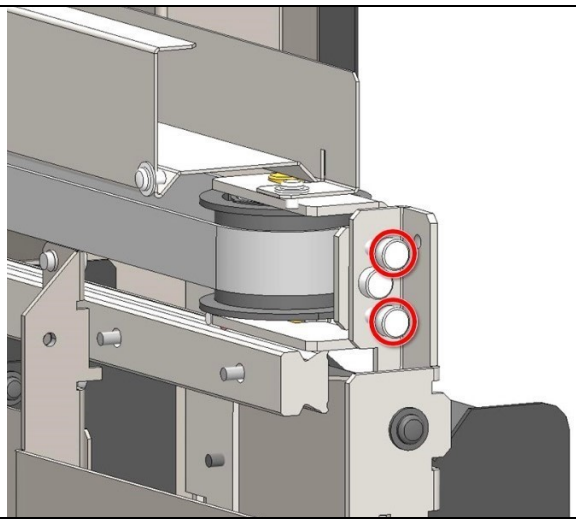

Step 12 / 12

This completes the belt tension adjustment. Next, adjust the belt position.

次の手順	ベルト位置調整
Next Step	Belt Position Adjustment

TY-300 Belt Position Adjustment Information

Step 1 / 4

Necessary tools

一般ツール/General Tool

プラスドライバー No.2 No.2 Phillips screwdriver	
六角レンチ 3.0 mm 3.0 mm hexagonal wrench	

Step 2 / 4

Special tools

特殊治具/Special Tools

なし None	

Step 3 / 4

Typical work time

作業時間/Typical work time

作業内容/Contents of work	時間/Time
キャリッジベルト位置調整 Carriage Belt Position Adjustment	50 min.

Step 4 / 4

Covers that need to be removed

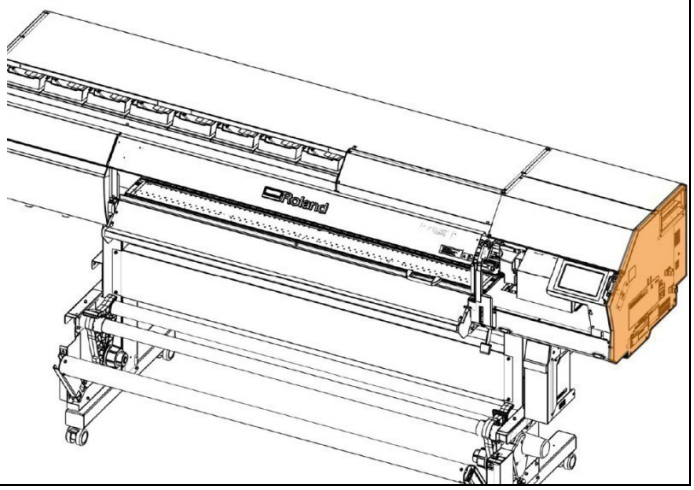

TY-300 Belt position adjustment procedure

Step 1 / 33

Turn on the power and connect Peck2 to the machine and enter service mode.

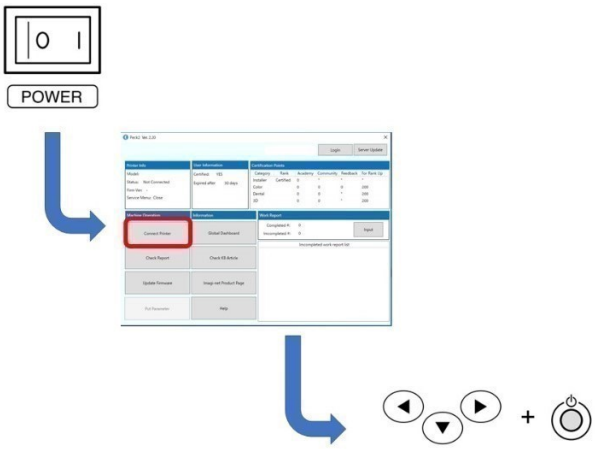

Step 2 / 33

Perform aging of the scan motor: Select [MOTOR MENU] > [AGING] > [SCAN] and press the [ENTER] key.

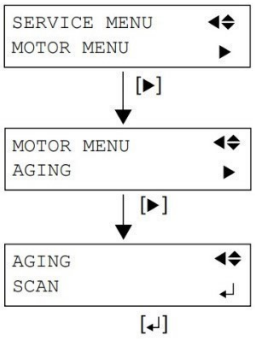

Step 3 / 33

Check the belt position. If the belt is not excessively touching the flange of the drive pulley, the position is proper. If it is only partially touching, it is considered to be proper.

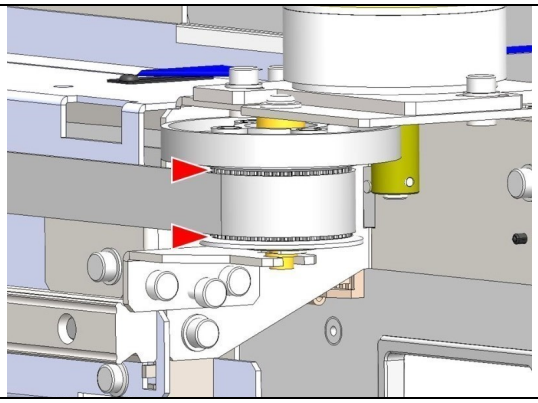

Step 4 / 33

If the position is appropriate, no adjustment is necessary; leave the aging process and proceed to [Idle pulley side adjustment]. If it is not proper, perform the drive pulley side adjustment according to the following procedure.

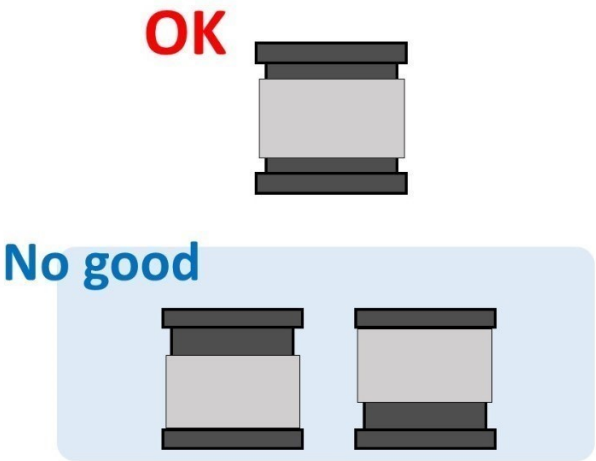

Step 5 / 33

[Drive pulley side adjustment]

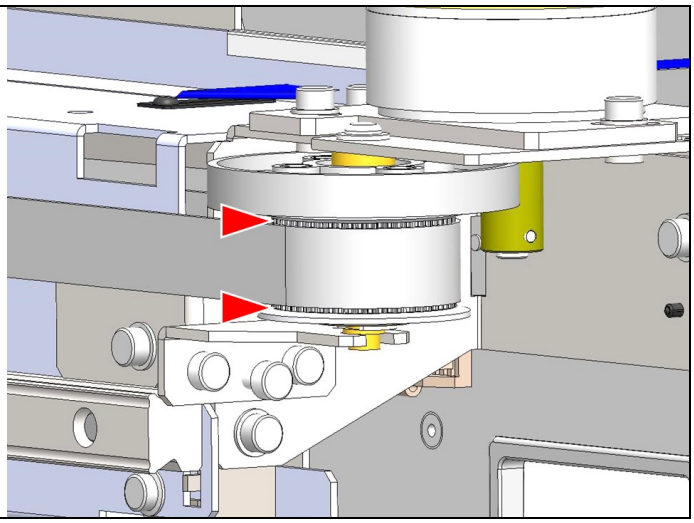

Step 6 / 33

Press the [ENTER] key to end the aging process.

```
SCAN
NOW AGING
```

[↵]

Step 7 / 33

Loosen the fixing screws (2 places) on the right end of the belt just enough so that the drive pulley stay shaft does not come into contact with the fixing screw seat.

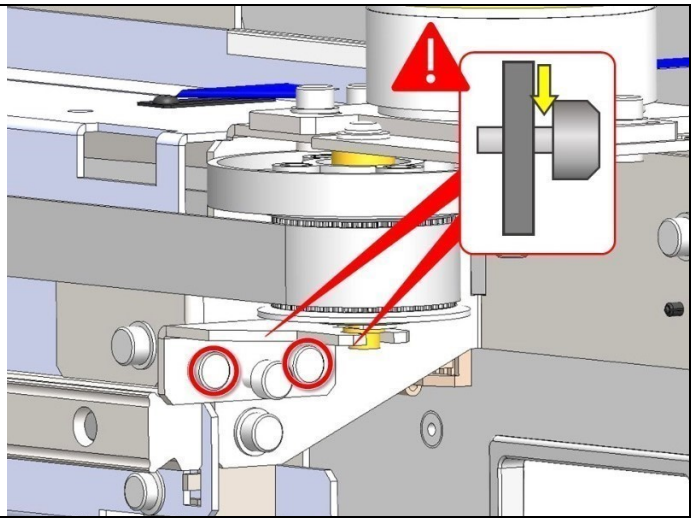

Step 8 / 33

Loosen the fixing screw at the bottom of the scan motor by about half a turn.

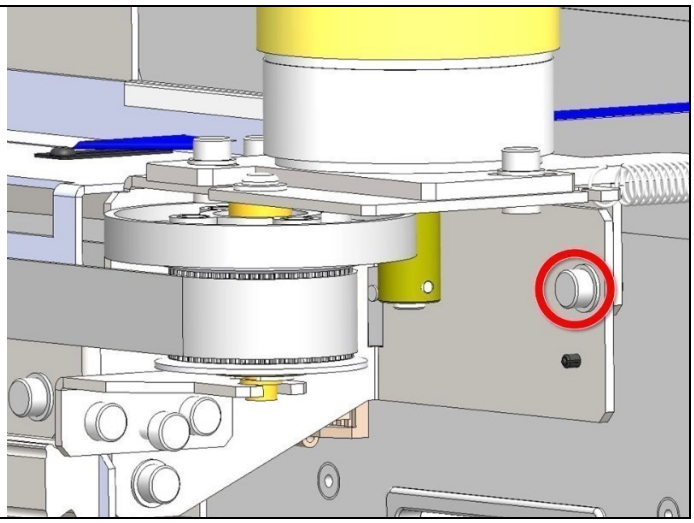

Step 9 / 33

Press the [ENTER] key to perform the aging of the scan motor again.

```
AGING
SCAN
```

[↵]

Step 10 / 33

Turn the adjustment screw and adjust the belt position referring to the following. If the belt is toward the bottom of the unit: Turn the adjustment screw clockwise (tightening direction) little by little. If the belt is toward the top of the unit: Turn the adjustment screw counterclockwise (loosening direction) little by little. Repeat the adjustment until the belt does not touch the pulley flange when the carriage is in the printing zone.

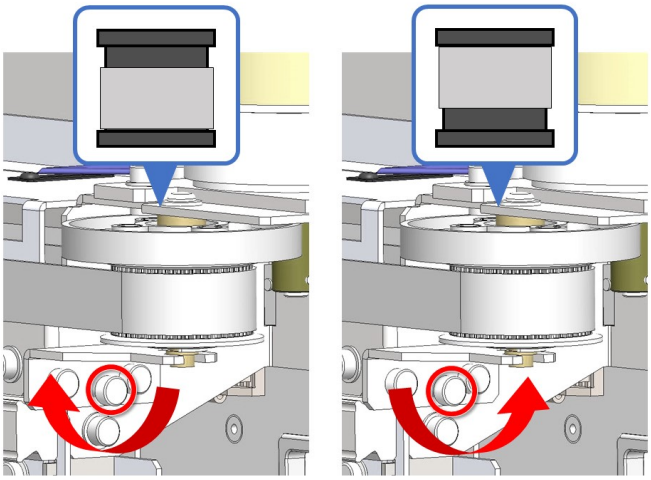

Step 11 / 33

Check that the shaft does not come off the stay.

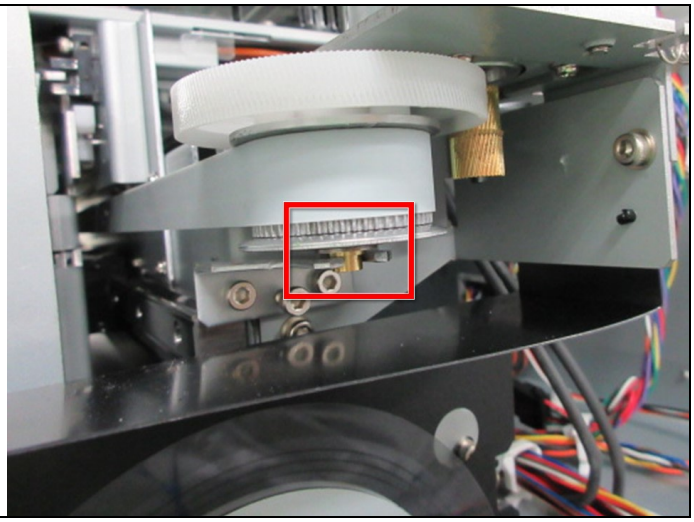

Step 12 / 33

Tighten the fixing screws (2 places). Be careful not to tighten them too much as this may cause the adjusted pulley to move.

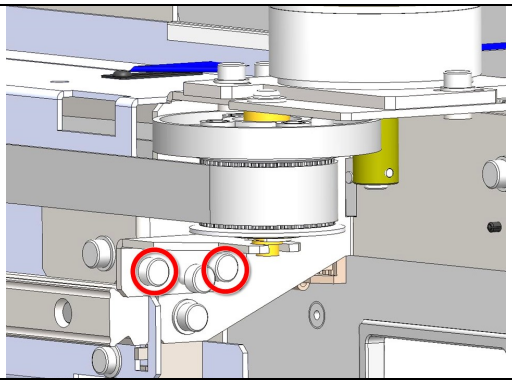

Step 13 / 33

Check to see if the belt is contacting the pulley flange too much. If there is excessive contact, make another adjustment. If it is appropriate, proceed to the next step, "Idle pulley side adjustment," with the aging process still being performed.

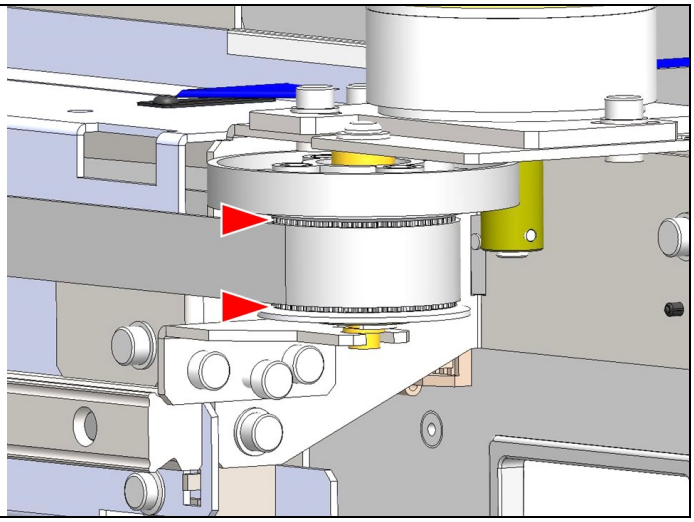

Step 14 / 33

[Idle pulley side adjustment]

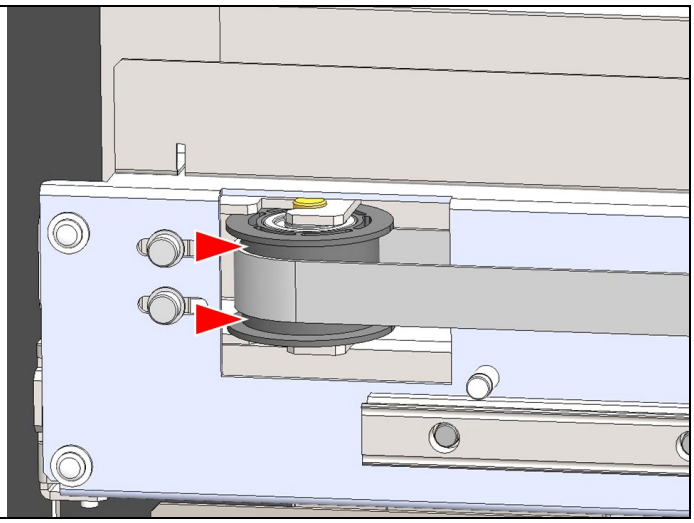

Step 15 / 33

Check the position of the belt.

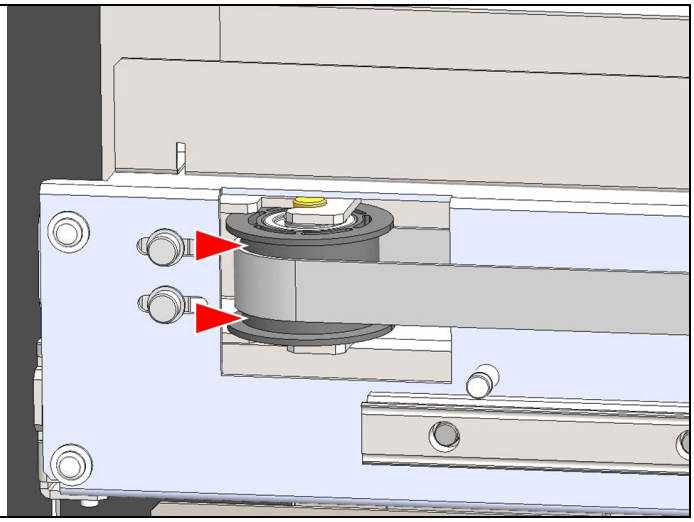

Step 16 / 33

If the belt is not excessively touching the idle pulley flange, the position is proper. If it is only partially touching, it is considered to be proper. If it is proper, no adjustment is necessary. If it is not appropriate, make the following adjustments.

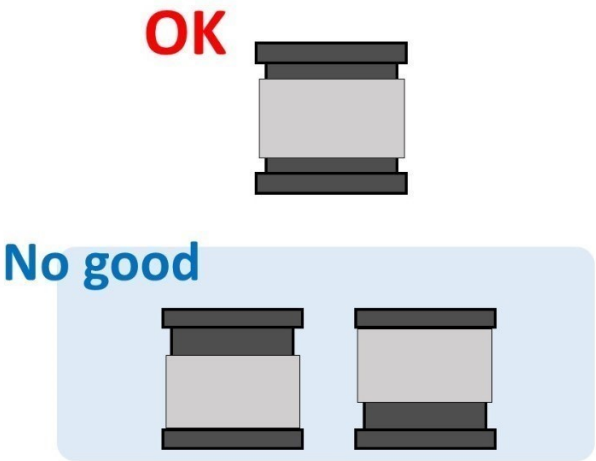

Step 17 / 33

Press the [ENTER] key to end the aging process.

```
SCAN
NOW AGING
```

[↵]

Step 18 / 33

Loosen the fixing screws (2 places) on the left end of the belt about 1/8 to 1/4 turn. If the screw is loosened too much, it will be difficult to adjust. Also, when turning the screw, be careful of protruding objects, as you may injure your hands.

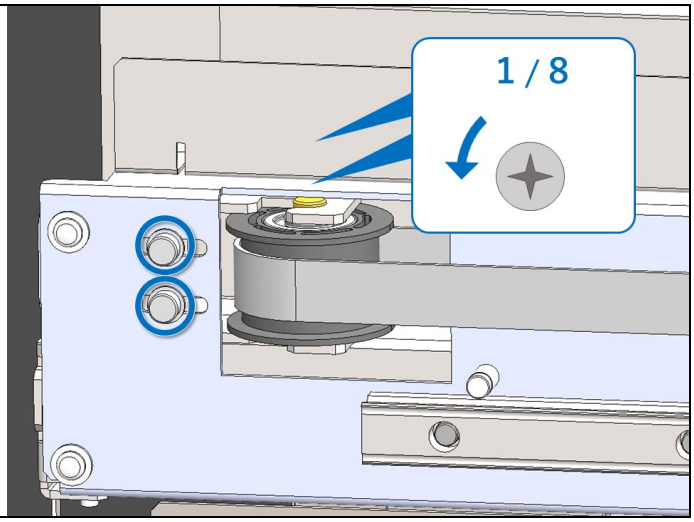

Step 19 / 33

Loosen the adjustment screws (2 places) three times to create a gap between the tip of the screws and the idle pulley holder.

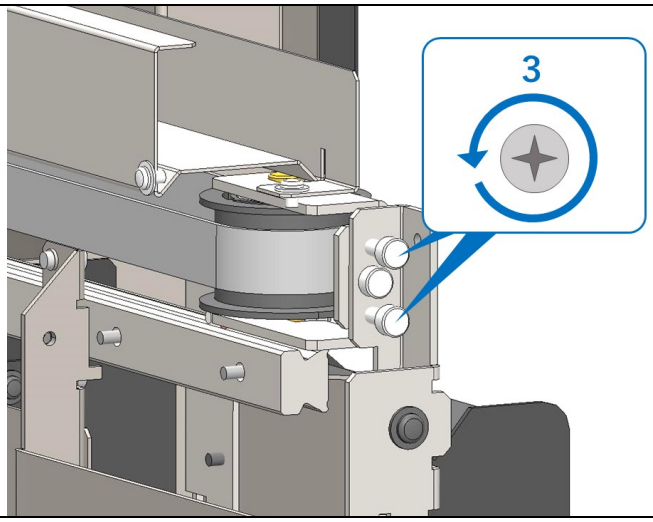

Step 20 / 33

Press the [ENTER] key to perform aging of the scan motor again.

```
AGING
SCAN
```

[↵]

Step 21 / 33

Adjustment is complete if there is a point where the belt does not come into contact with the pulley flange when the print head carriage is over the platen. The belt does not need to be away from the flange at all times.

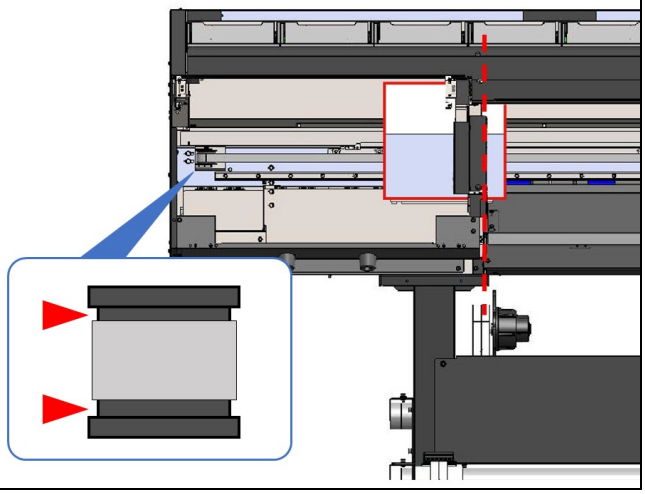

Step 22 / 33

Turn the adjustment screw to adjust the belt position referring to the following. Since there are no grooves in the pulley, the belt easily slides up and down, so adjust slowly. If the belt is toward the top of the main machine: Turn the adjustment screw (lower) clockwise little by little to press it against the idle pulley holder. If the belt is toward the bottom of the machine: Turn the adjustment screw (upper) clockwise little by little to press it against the idle pulley holder.

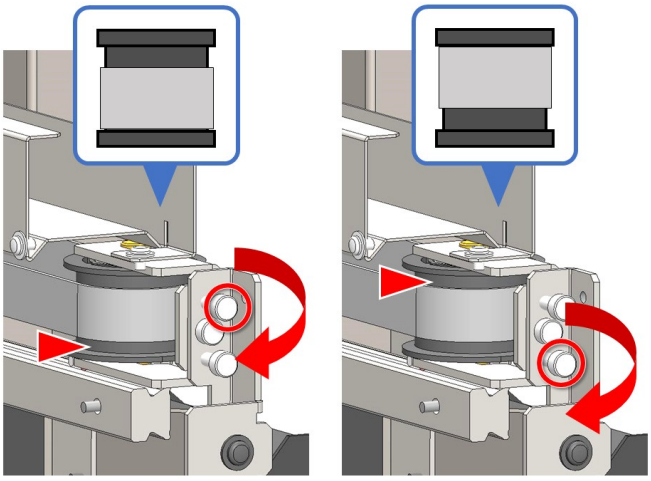

Step 23 / 33

Tighten the fixing screws (2 places).

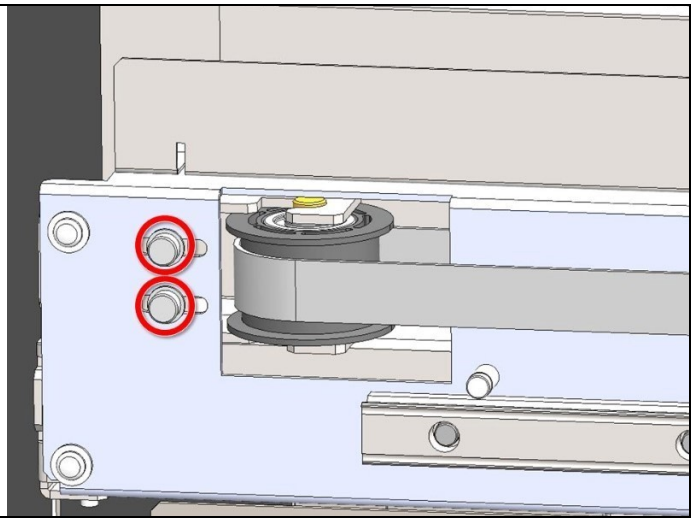

Step 24 / 33

Tighten the adjusting screw that is not in contact with the idle pulley holder until it lightly touches the idle pulley holder. If you tighten it too much, the

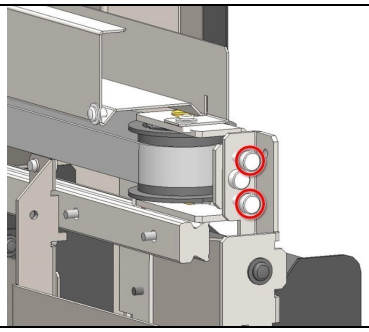

idle pulley holder may move.

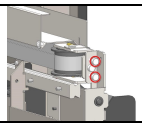

Step 25 / 33

Press the [ENTER] key to complete the aging process.

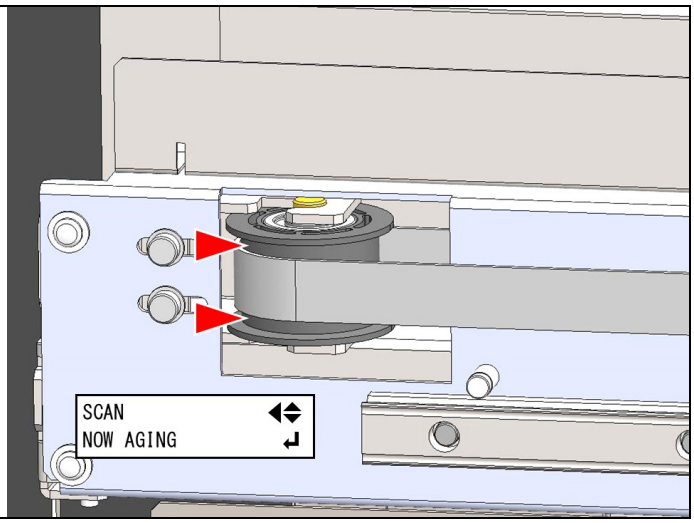

Step 26 / 33

Loosen the scan motor fixing screws (three places).

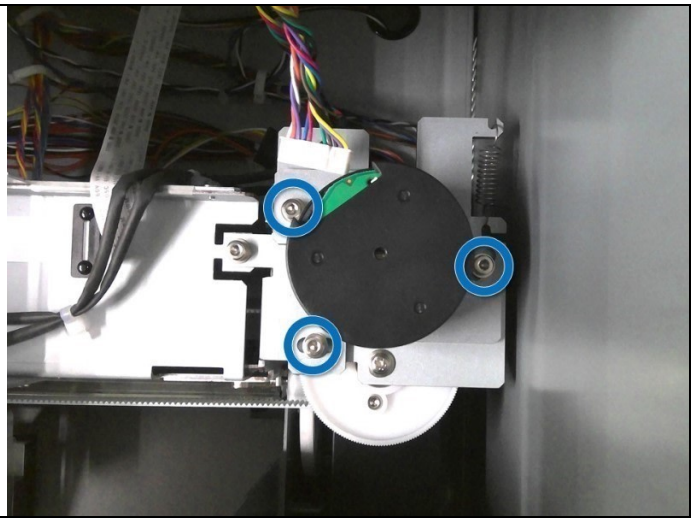

Step 27 / 33

Move the carriage from side to side by hand to ensure the gears are engaged. Do not use aging for this check.

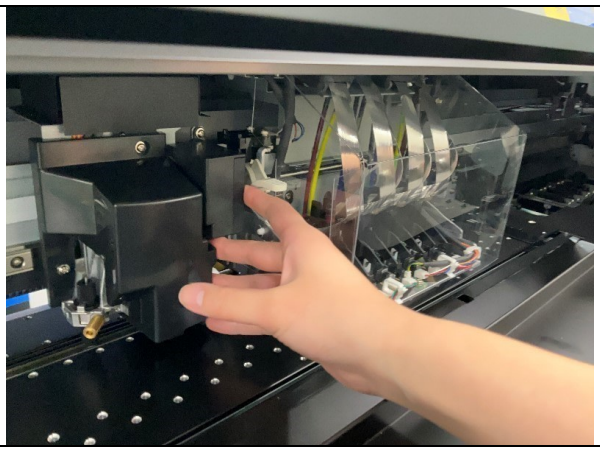

Step 28 / 33

Re-tighten the scan motor fixing screws in the order shown.

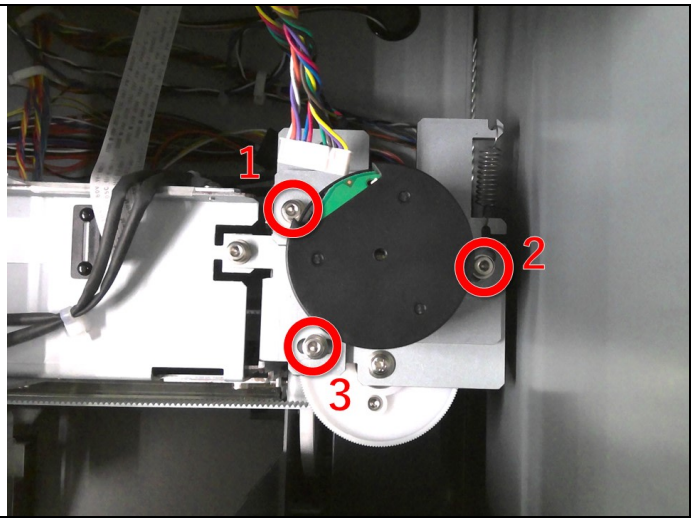

Step 29 / 33

Tighten the fixing screw at the bottom of the scan motor.

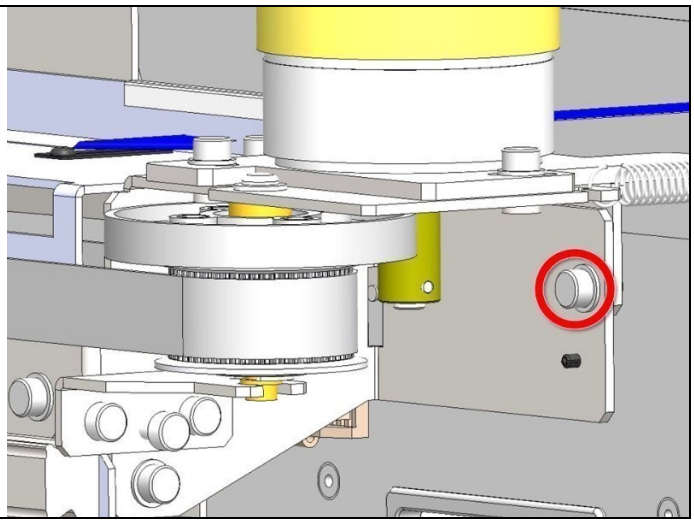

Step 30 / 33

Press the [ENTER] key to perform aging of the scan motor again. If the belt is not excessively touching the idle pulley flange, the position is proper and this belt position adjustment is complete.

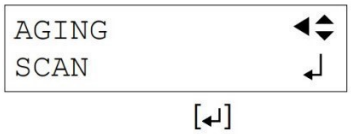

Step 31 / 33

Install the cover that you removed.

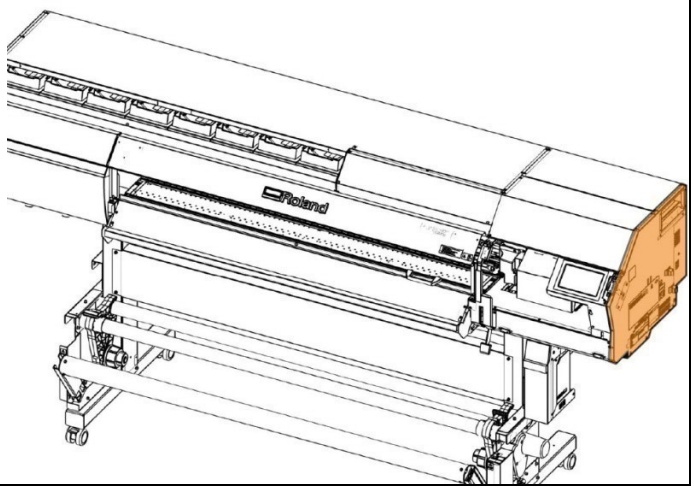

Step 32 / 33

Turn the power on and connect Peck2 to the machine and enter service mode.

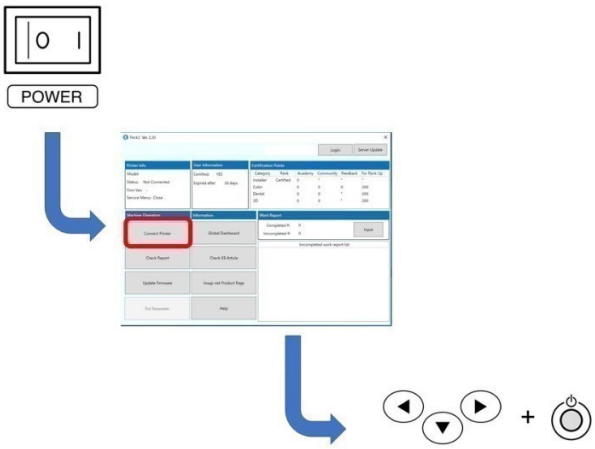

Step 33 / 33

Select [SERVICE MENU] > [SENSOR CHECK] to check if the cover sensor is responding correctly.

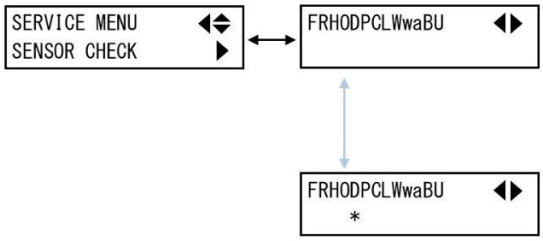

TY-300 Scan Motor Replacement Information

Step 1 / 5

Necessary tools

一般ツール/General Tool

プラスドライバー No.2 No.2 Phillips screwdriver	
六角レンチ 3.0 mm 3.0 mm hexagonal wrench	

Step 2 / 5

Other tools

その他のツール/Other Tools

白色結束バンド(幅2.5mm) White bundling bands (2.5 mm wide)	

Step 3 / 5

Special tools

特殊治具/Special Tools

GREASE,FLOIL G-902 10ML_02	

Step 4 / 5

Typical work time

作業時間/Typical work time

作業内容/Contents of work	時間/Time
スキャンモーター交換 Scan Motor Replacement	15 min.
サーボロック確認 Servo Lock check	1 min.
エージング確認 Aging check	5 min
モーター時間クリア Motor time clear	1 min.

Step 5 / 5

To prevent static damage, ground yourself before touching any electronic components. You can discharge static electricity by touching an unpainted metal surface.

TY-300 Scan Motor Replacement Procedure

Step 1 / 24

Remove the covers and disconnect the connectors on the side cover.

Step 2 / 24

Remove the cap elevation gear cover.

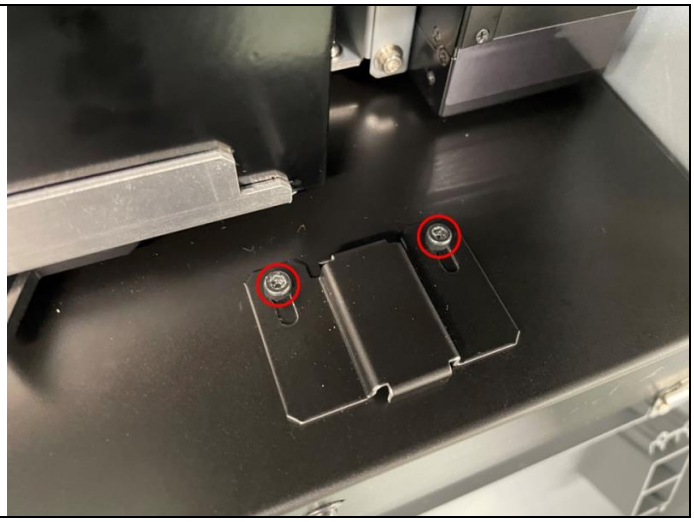

Step 3 / 24

Turn the elevation gear backward about five times to lower the cap, then move the print head carriage slightly to the left.

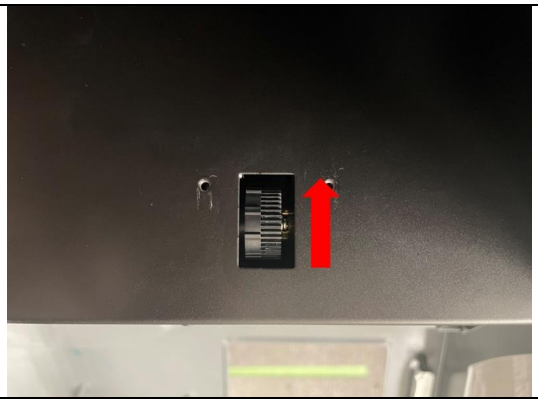

Step 4 / 24

Remove the spring.

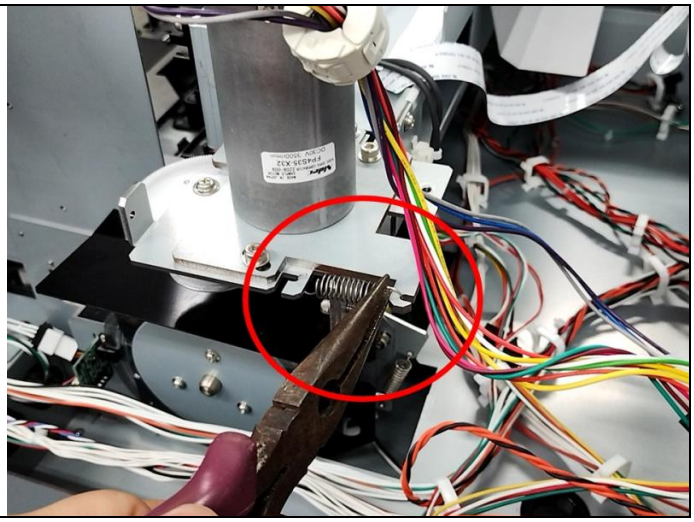

Step 5 / 24

Remove the cable tie that secures the ferrite core.

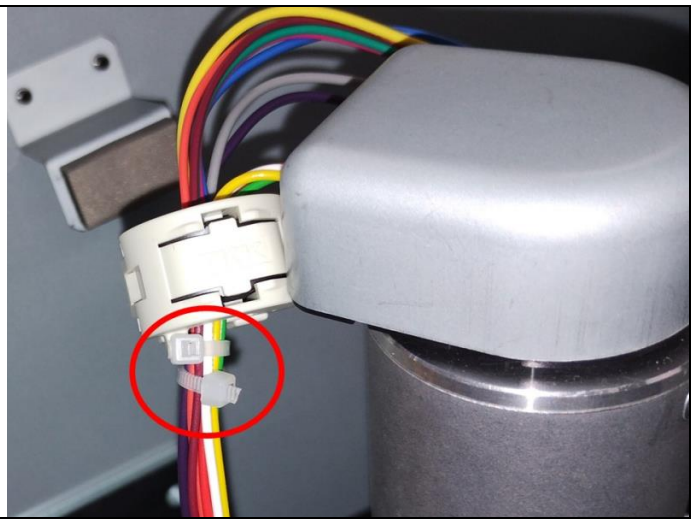

Step 6 / 24

After removing the screws, connector, and ferrite core, remove the motor along with the flange.

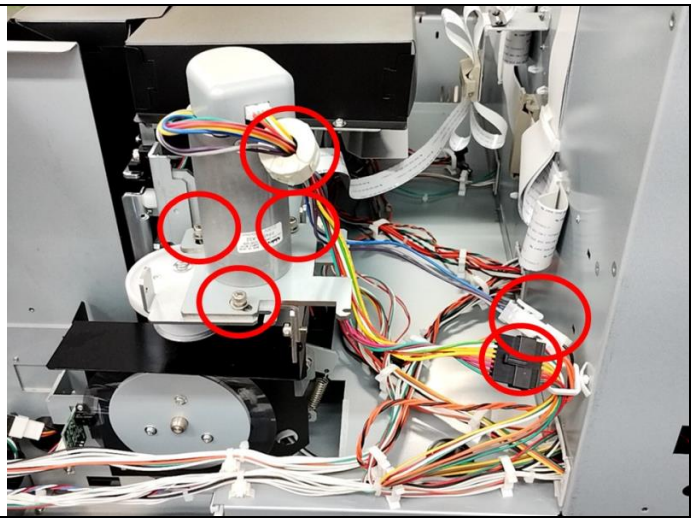

Step 7 / 24

Remove the screws and remove the motor from the flange.

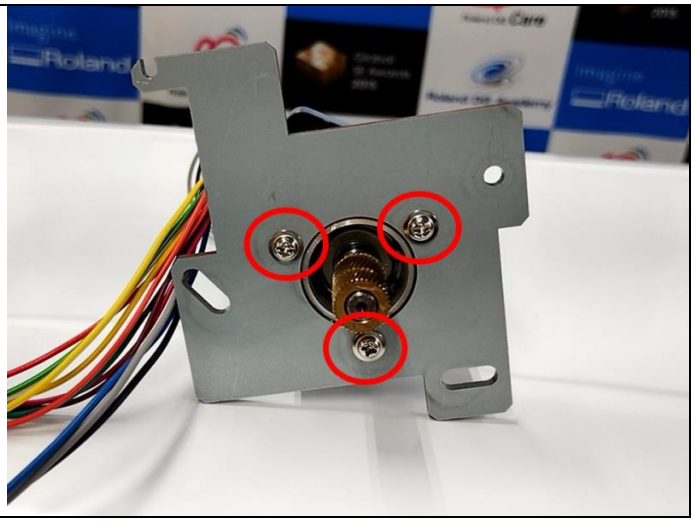

Step 8 / 24

Install a new motor, paying attention to the orientation of the motor and flange.

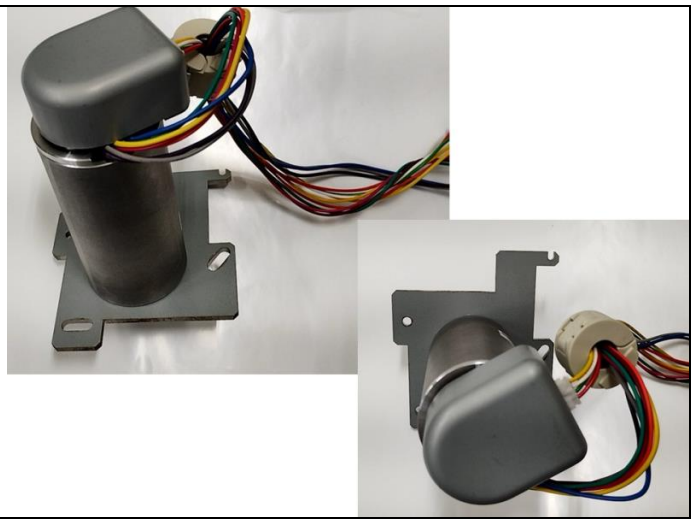

Step 9 / 24

Install the ferrite core on the new motor.

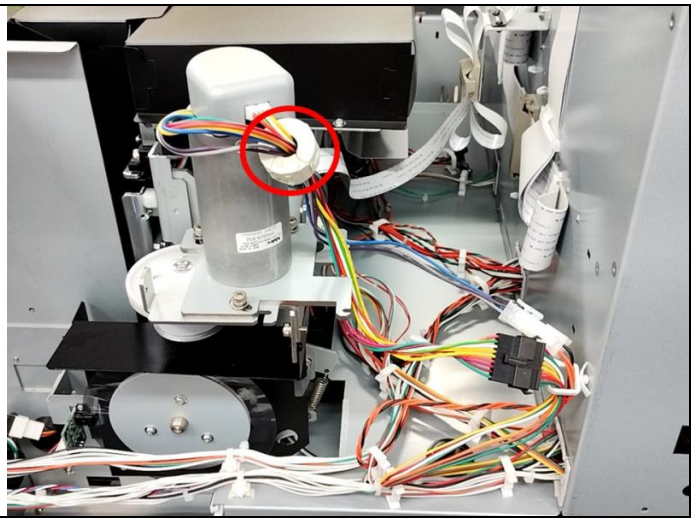

Step 10 / 24

Apply a moderate amount of grease to the drive gear and motor.

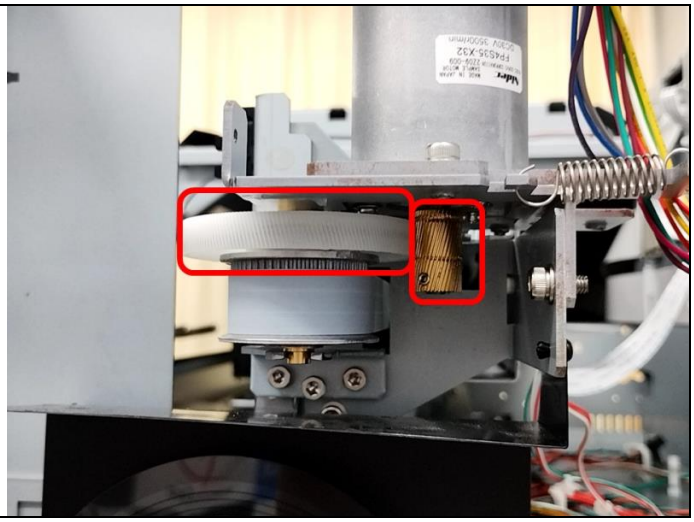

Step 11 / 24

Attach the cable tie to the cables.

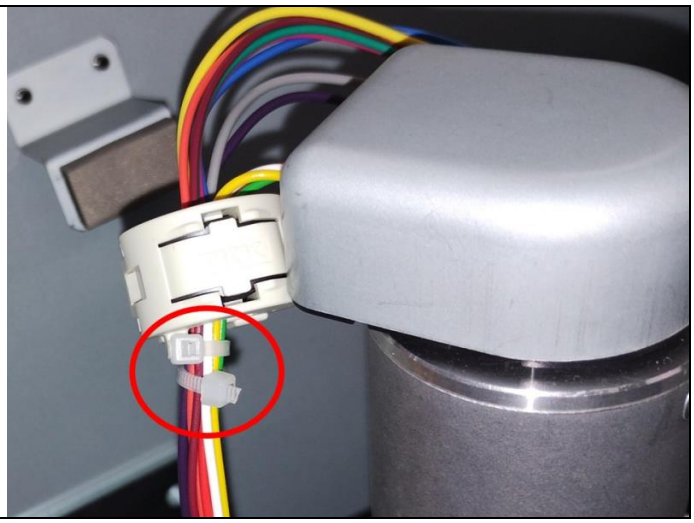

Step 12 / 24

Attach the motor connectors and temporarily tighten the flange.

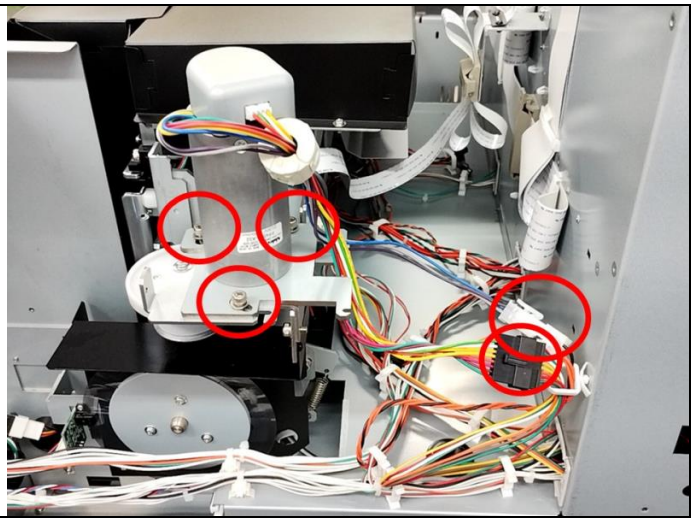

Step 13 / 24

Attach the spring.

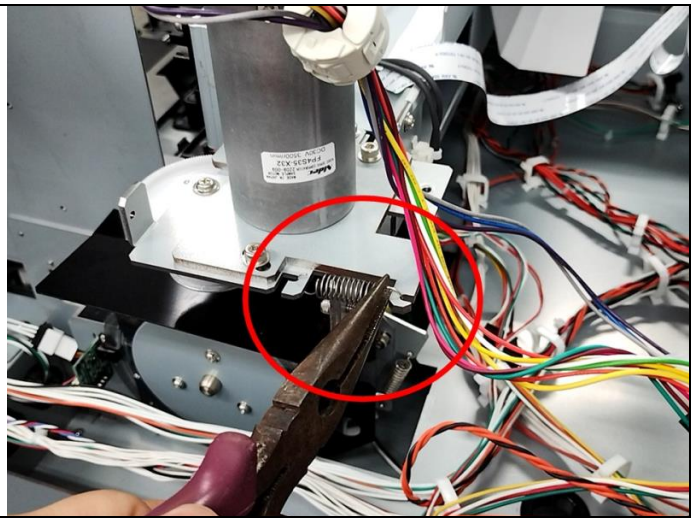

Step 14 / 24

Move the print head carriage by hand to make sure the motor and gears are engaged and rotating together.

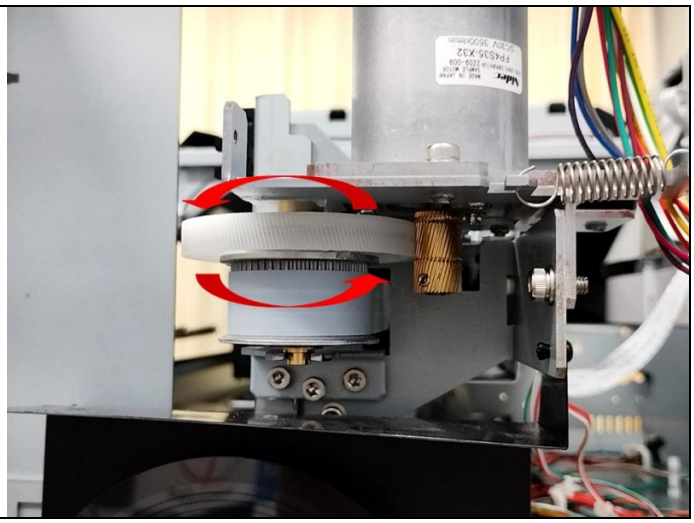

Step 15 / 24

Fully tighten the flange screws in the order shown in the figure.

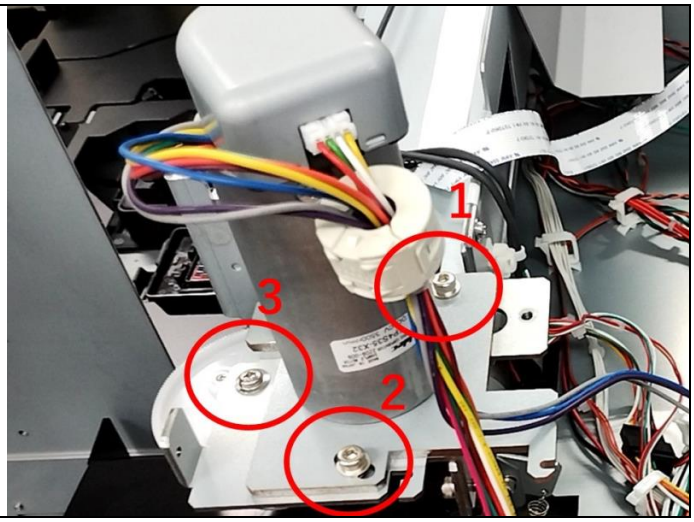

Step 16 / 24

Attach the connectors on the side cover and then attach the cover.

Step 17 / 24

Lock the carriage.

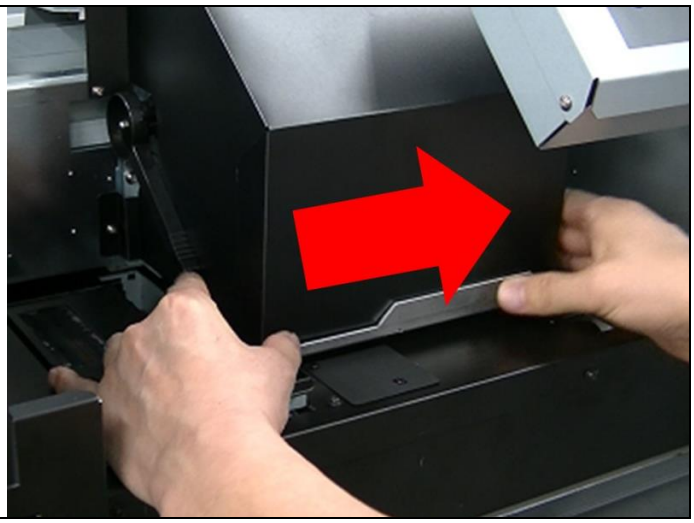

Step 18 / 24

Connect Peck2 to the printer and enter service mode.

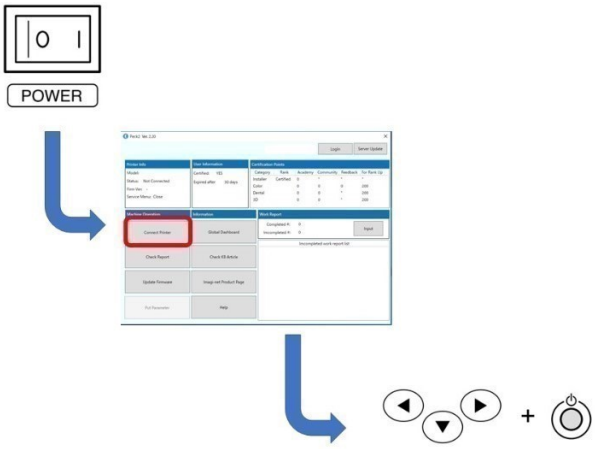

Step 19 / 24

Press [ENTER] at [MOTOR MENU] > [ECCENTRICITY] > [CORRECT] to perform eccentricity correction for the scan motor. The eccentricity correction amount is automatically updated.

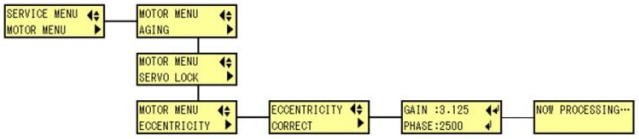

Step 20 / 24

Check the servo lock. Select [MOTOR MENU] > [SERVO LOCK]. Lower the cap elevation gear and move the print head carriage left and right by hand, and check that the displayed numbers change in accordance with the movement.

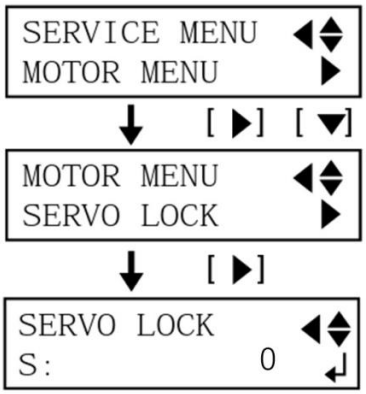

Step 21 / 24

When you press [ENTER] on the [SERVO LOCK] menu, [*] will be displayed. At this time, make sure that even if you try to move the print head carriage by hand, it is difficult to move and the displayed value returns to its original position.

Step 22 / 24

Perform aging and check for any abnormal noises or operation.

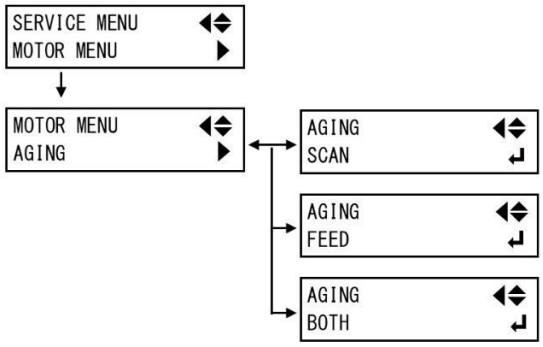

Step 23 / 24

Clear the history by selecting [MOTOR GROUP] > [MOTOR HOURS S].

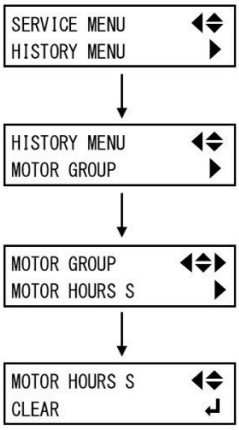

Step 24 / 24

Install the gear cover in the correct position.

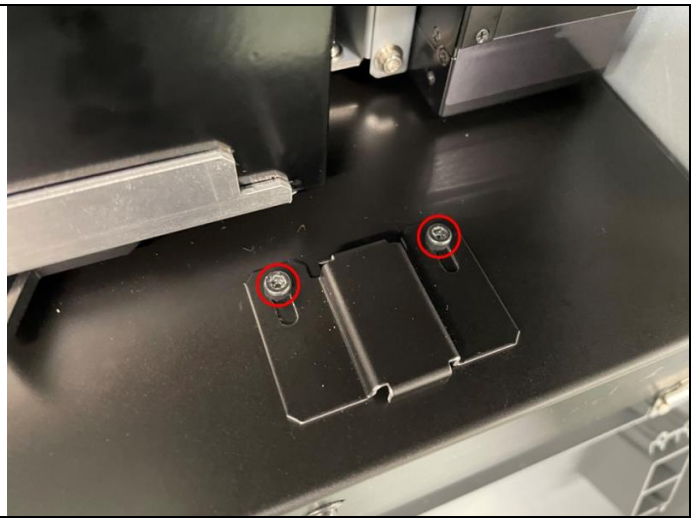

TY-300 Feed Motor Replacement Information

Step 1 / 4

Necessary tools

一般ツール/General Tool

プラスドライバー No.2 No.2 Phillips screwdriver	
六角レンチ 3.0 mm 3.0 mm hexagonal wrench	

Step 2 / 4

Special tools

特殊治具/Special Tools

6000004129 GREASE,FLOIL G-902 10ML_02	

Step 3 / 4

Typical work time

作業時間/Typical work time

作業内容/Contents of work	時間/Time
フィードモーター交換 Feed motor replacement	30 min.
サーボロック確認 Servo lock check	1 min.
グリット・エンコーダチェック Grit encoder check	1 min.
エージング確認 Aging check	5 min
モーター時間クリア Motor time clear	1 min.

Step 4 / 4

To prevent static damage, ground yourself before touching any electronic components. You can discharge static electricity by touching an unpainted metal surface.

TY-300 Feed Motor Replacement Procedure

Step 1 / 23

Turn off the power and unplug the power cable.

Step 2 / 23

Remove the right side cover.

Step 3 / 23

Remove the spring.

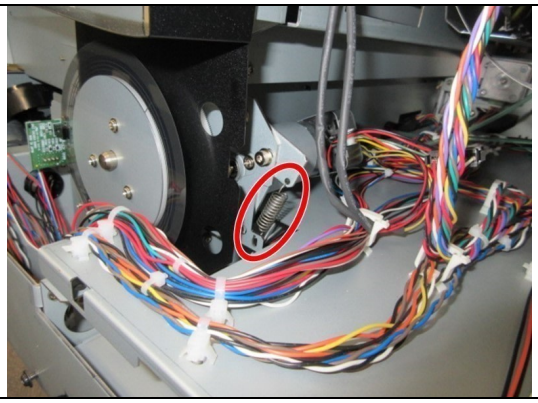

Step 4 / 23

Remove the screws and remove the motor along with the flange.

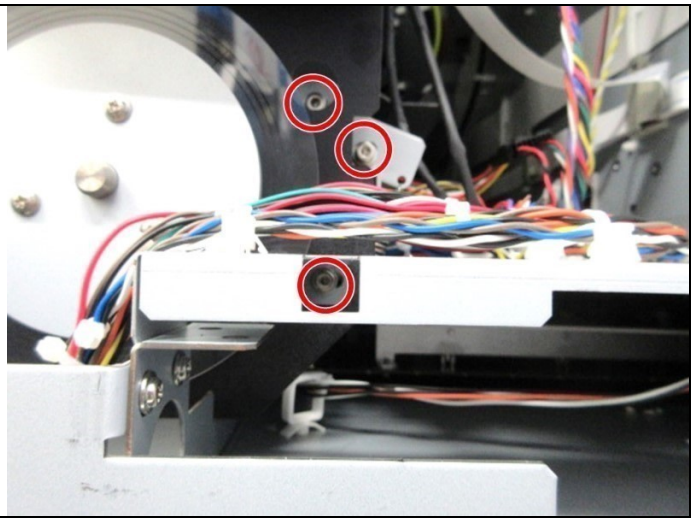

Step 5 / 23

Remove one cable saddle.

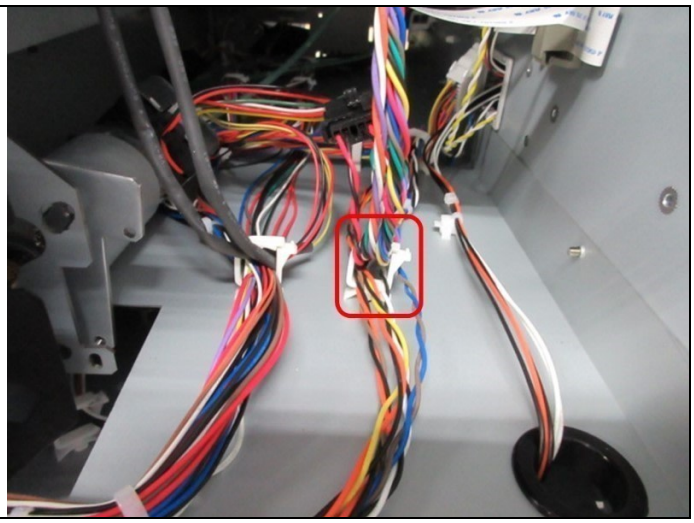

Step 6 / 23

Unplug the cable connector.

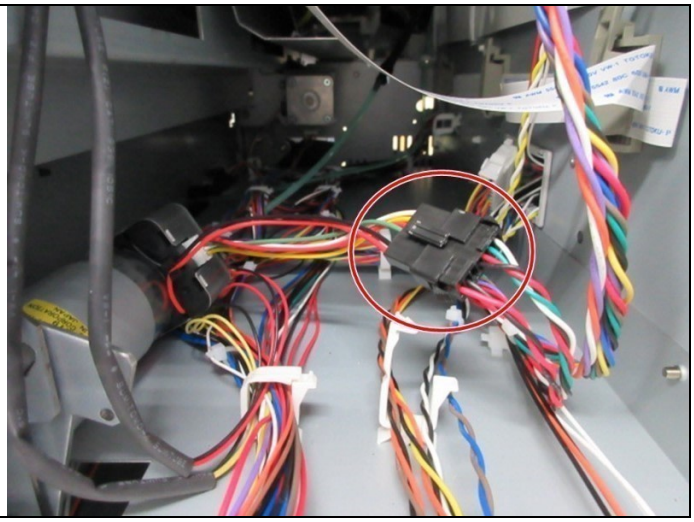

Step 7 / 23

Install the new motor onto the flange, noting the orientation of the flange in relation to the motor cable.

Step 8 / 23

Attach the connector and return the motor to its mounting position.

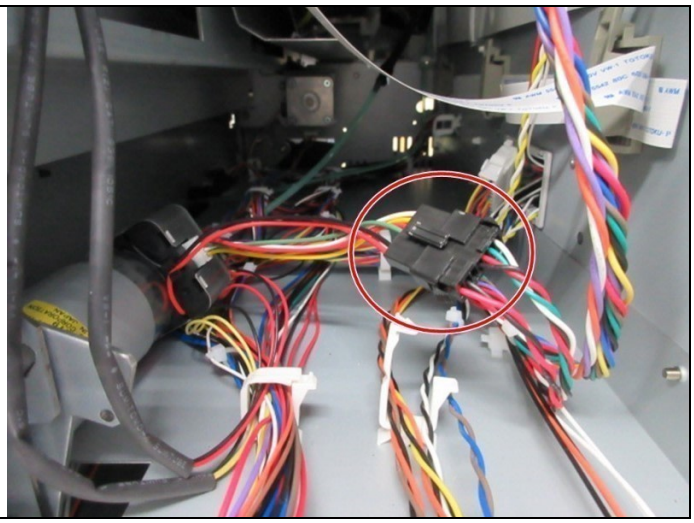

Step 9 / 23

Pay attention to the orientation of the flange, and temporarily tighten it with the screws (3 places).

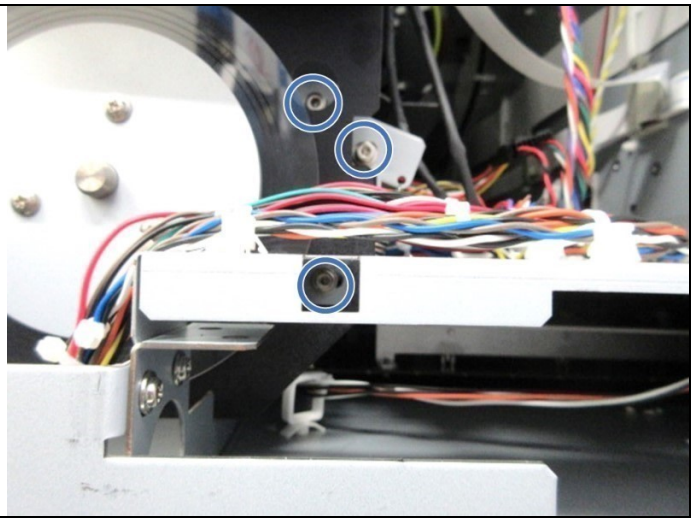

Step 10 / 23

Attach the spring.

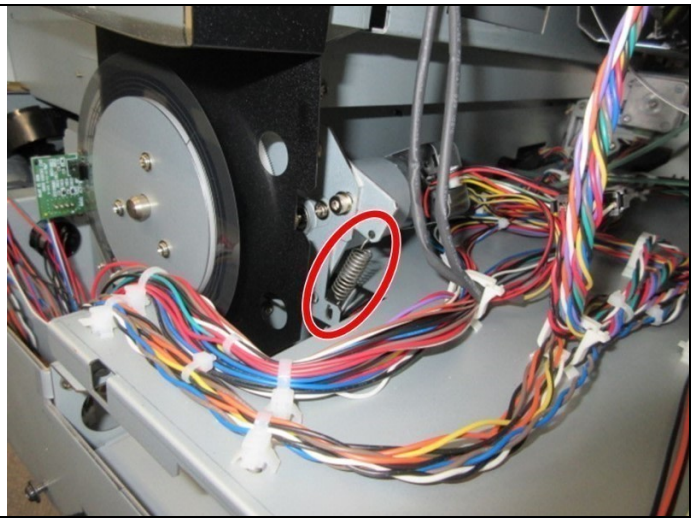

Step 11 / 23

Turn the drive gear more than three times by hand and check that the gears mesh together.

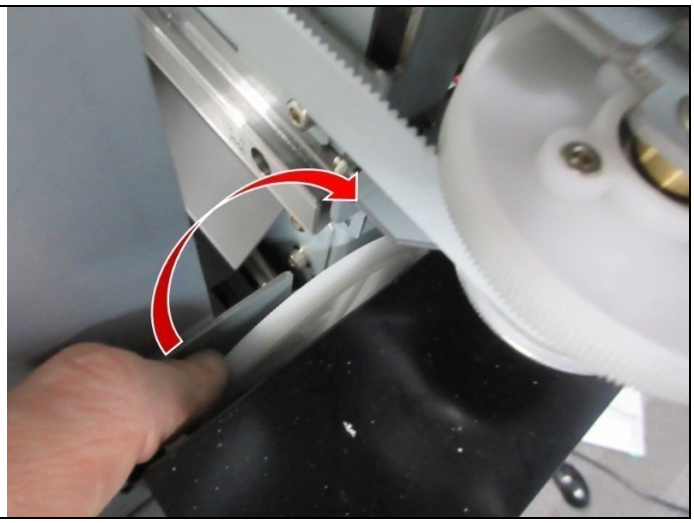

Step 12 / 23

Apply grease to the drive gear and motor gear.

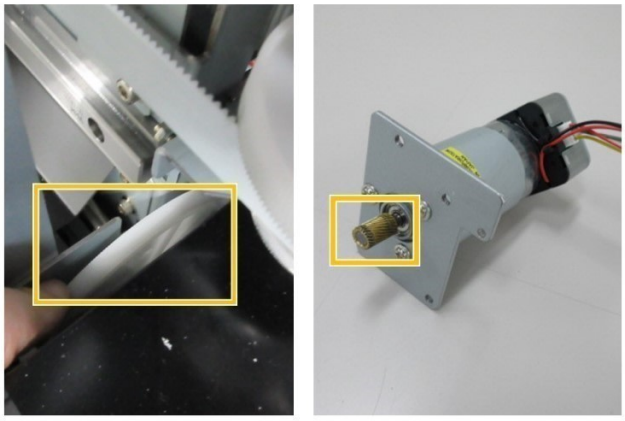

Step 13 / 23

Fully tighten the screws (three places).

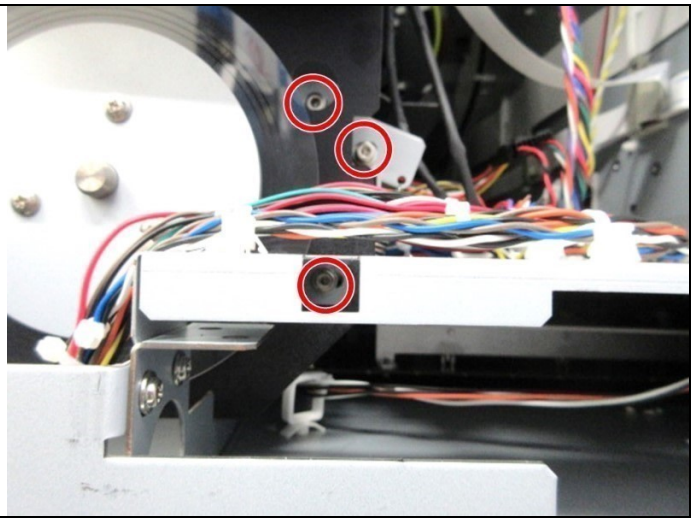

Step 14 / 23

Attach the motor cable to the saddle.

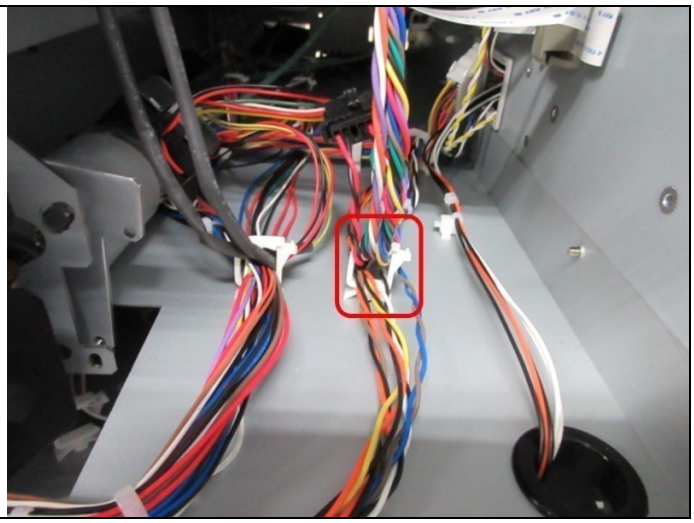

Step 15 / 23

Replace the cover and turn the main power switch.

Step 16 / 23

Connect Peck2 to the machine and enter service mode.

Step 17 / 23

Select [SERVICE MENU] > [SENSOR CHECK].

Step 18 / 23

When the maintenance cover is closed, check the display under the monitor display [D]. If there is a [*] displayed, please make adjustment.

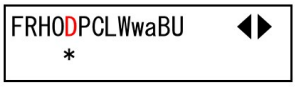

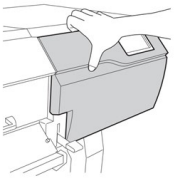

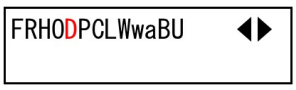

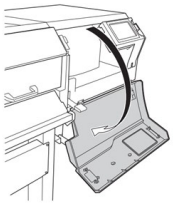

Step 19 / 23

Check the servo lock. From [SERVICE MENU] > [MOTOR MENU] > [SERVO LOCK], select [F]. Rotate the grit roller by hand and check that the displayed number changes in accordance with the movement.

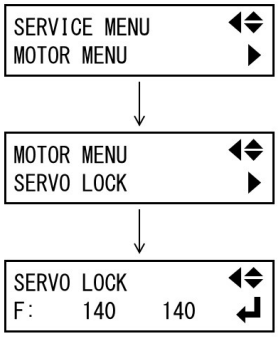

Step 20 / 23

When you press the [ENTER] key, [*] will be displayed and the motor will be excited. At this time, check that the grit roller does not move easily when rotated by hand and that the displayed value returns to its original value.

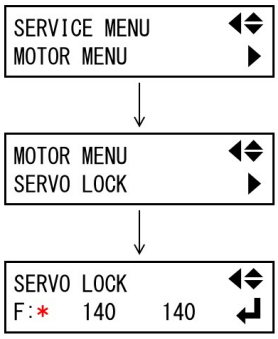

Step 21 / 23

Perform a grid encoder check. If the message [G-ENC. CHECK FAILED] is displayed, please check the following:

1. The grid encoder is installed correctly.
2. The feed motor is installed correctly.
3. The grid encoder is free of scratches

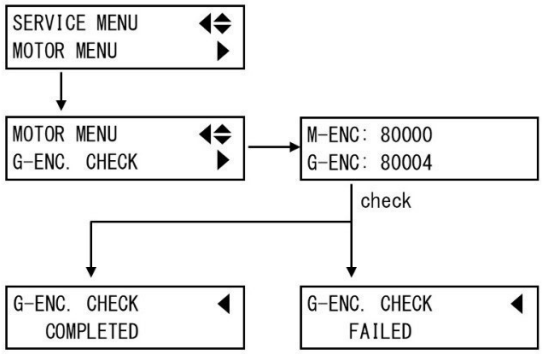

3. and dirt.

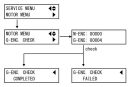

Step 22 / 23

Carry out the aging check [AGING] > [FEED]. Make sure the printer performs aging, and then finish aging by pressing the [ENTER] key. Remove media before performing aging.

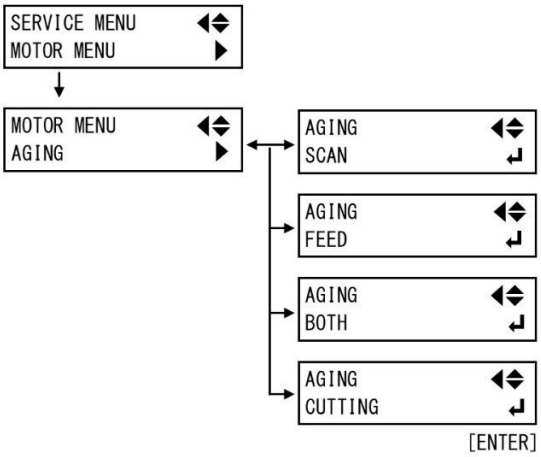

Step 23 / 23

Clear the history by [MOTOR GROUP] > [MOTOR HOURS F] > [CLEAR].

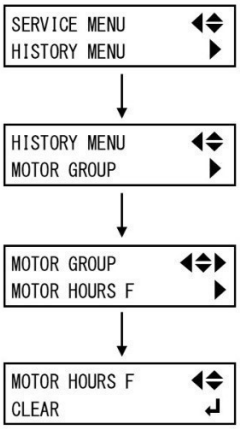

TY-300 Belt Replacement Information

Step 1 / 3

Necessary tools

一般ツール/General Tool

プラスドライバー No.2 No.2 Phillips screwdriver	
六角レンチ 3.0mm 3.0mm hexagonal wrench	
テープ Tape	

Step 2 / 3

Special tools

特殊治具/Special Tools

None	

Step 3 / 3

Typical work time

作業時間/Typical work time

作業内容/Contents of work	時間/Time
キャリッジベルト交換 Carriage belt Replacement	30 min.

TY-300 Belt Replacement Procedure

Step 1 / 19

Move the cutting carriage to the maintenance cover L side.

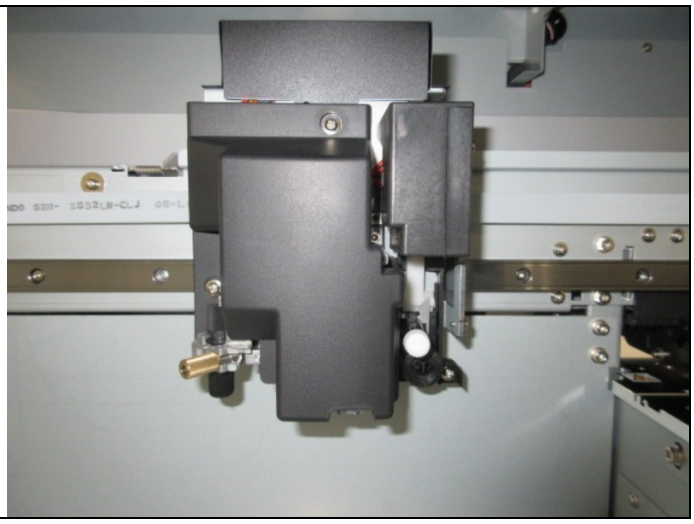

Step 2 / 19

Loosen the idle pulley side fixing screw on the left end of the belt by about 1/4 turn.

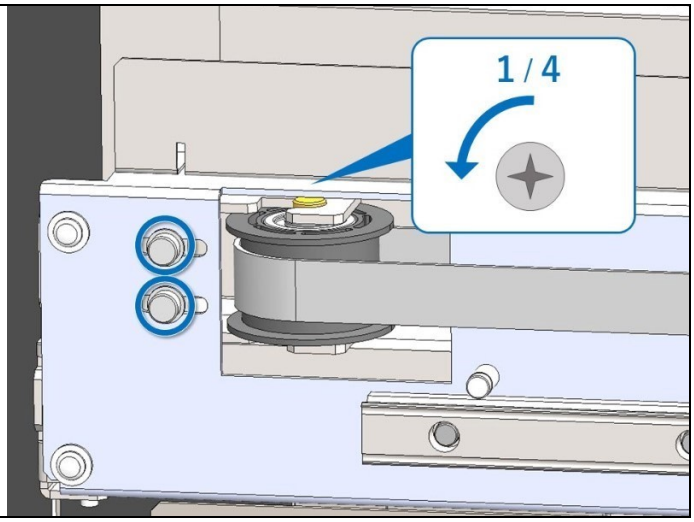

Step 3 / 19

Loosen the adjustment screw by about 2 to 3 turns.

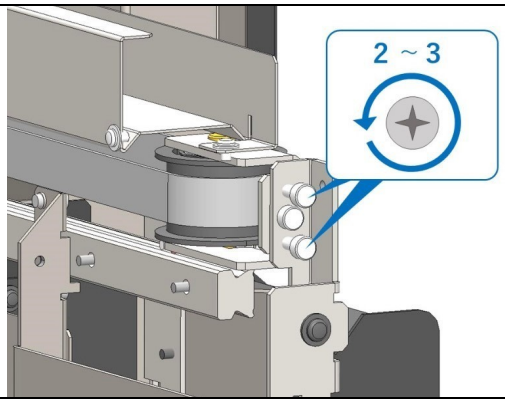

Step 4 / 19

Remove the cutting carriage cover.

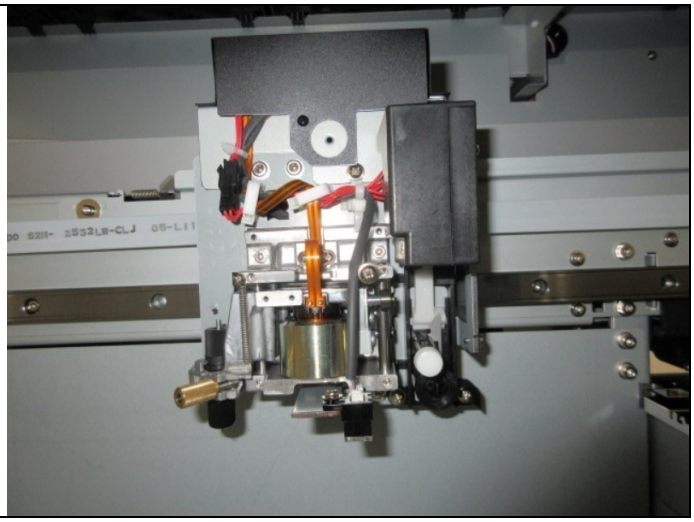

Step 5 / 19

Remove the two screws.

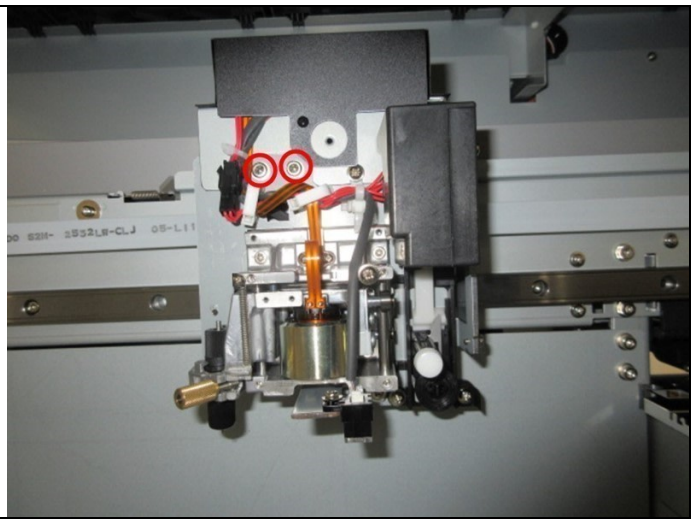

Step 6 / 19

Slide the cutting carriage to the right.

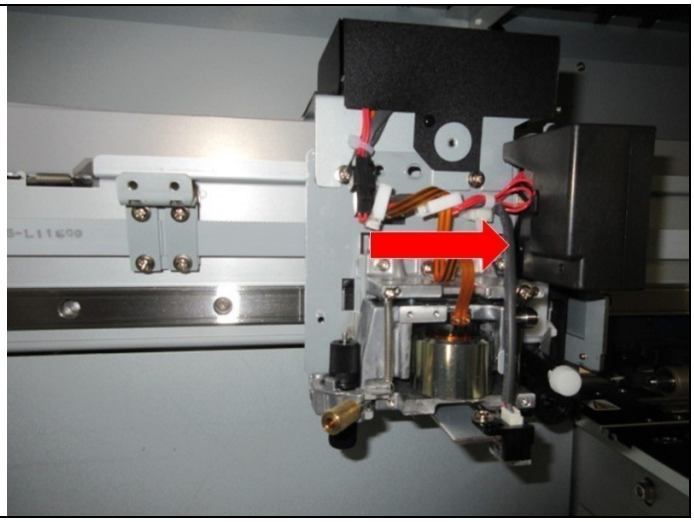

Step 7 / 19

[Caution] When removing the carriage belt, be careful not to touch the encoder scale. If the grease on the belt gets on the encoder scale, it may cause printing defects.

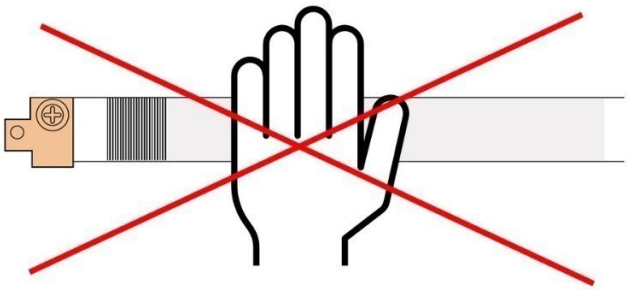

Step 8 / 19

[Caution] When replacing the carriage belt, always attach the new belt to the old one, and then remove the old belt and thread the new belt through at the same time. If you do not replace it in this way, you may not be able to install the new belt.

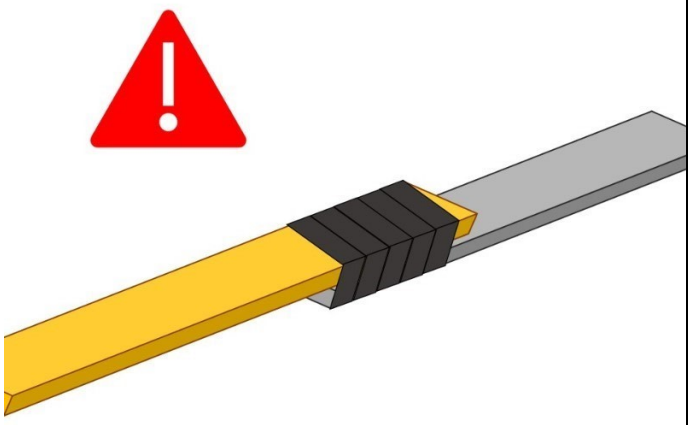

Step 9 / 19

Remove the carriage belt.

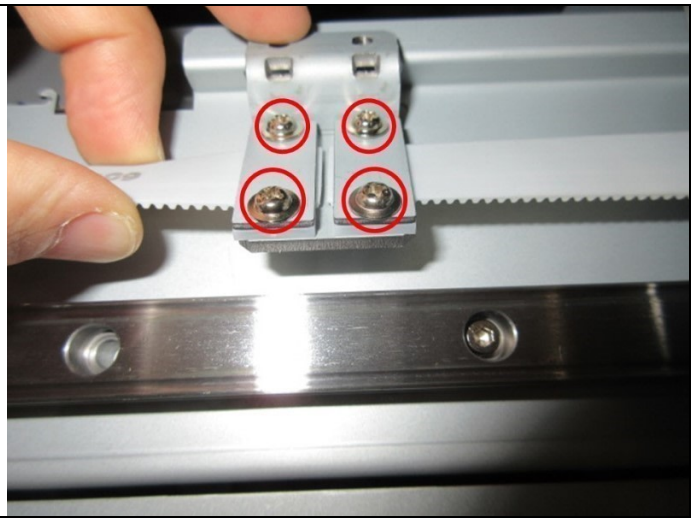

Step 10 / 19

Remove the carriage belt from the stay.

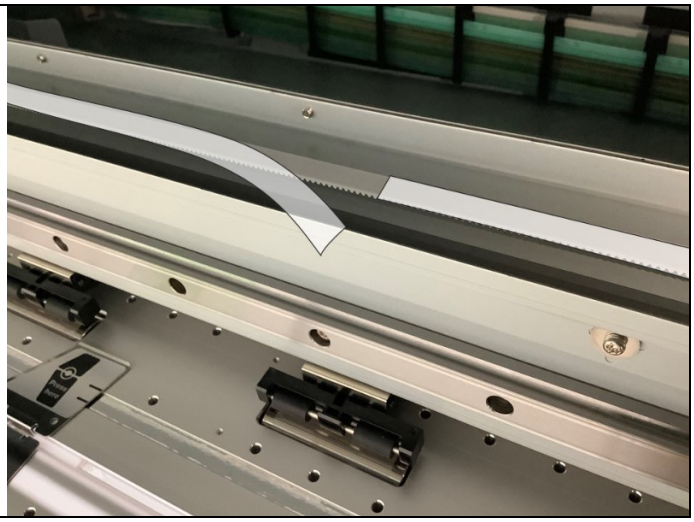

Step 11 / 19

Attach the new carriage belt end to one side and tape it in place.

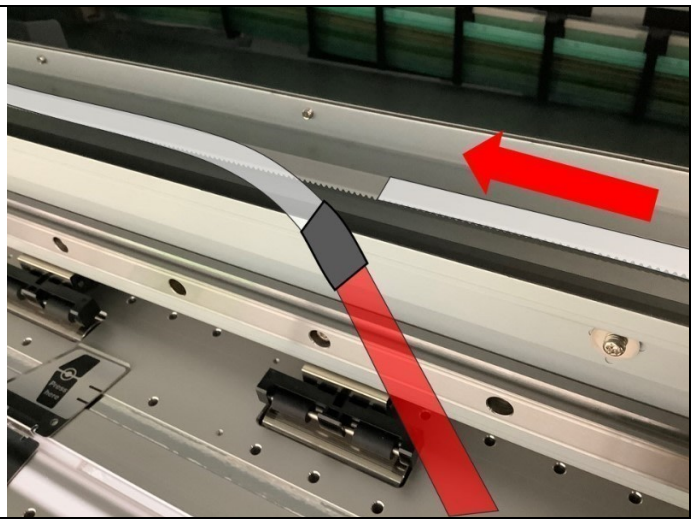

Step 12 / 19

Pull the old belt until it makes one full rotation until the new carriage belt reaches the unattached side of the belt. After the belt makes one rotation, remove the tape.

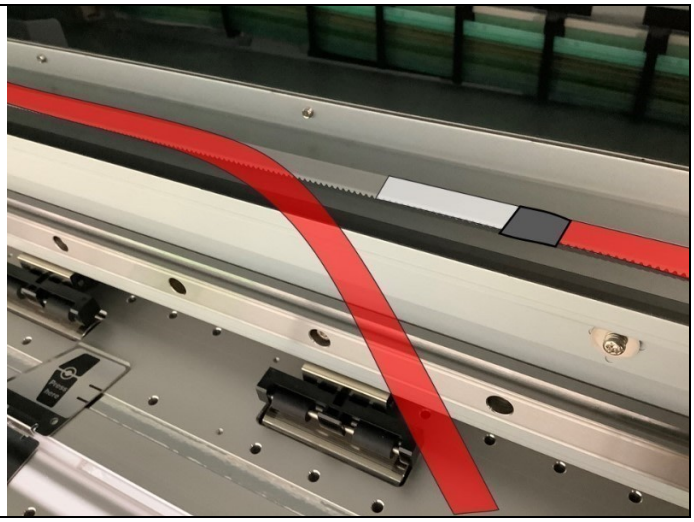

Step 13 / 19

Clamp both ends of the carriage belt with the resin plate and the sheet metal plate, and attach the belt holder with screws.

Step 14 / 19

Tighten the adjustment screw to eliminate any slack in the belt. Be careful not to tighten it too much.

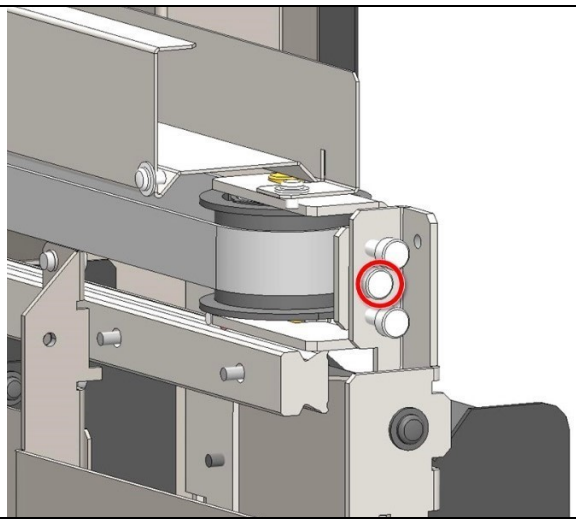

Step 15 / 19

Tighten the idle pulley side fixing screw.

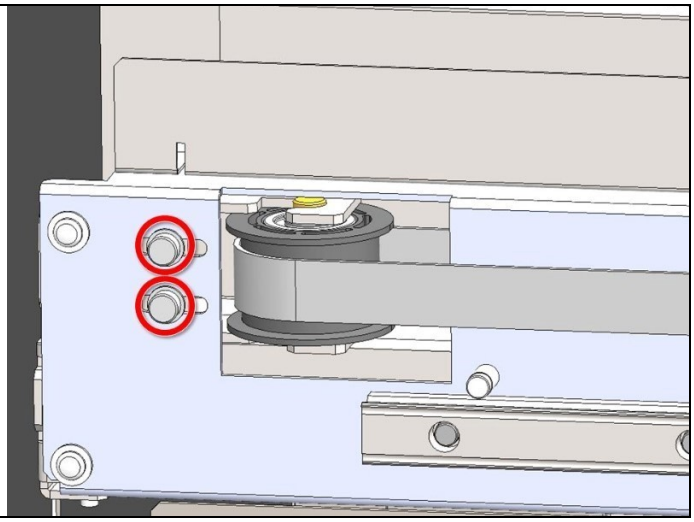

Step 16 / 19

Slide the cutting carriage and attach the belt holder.

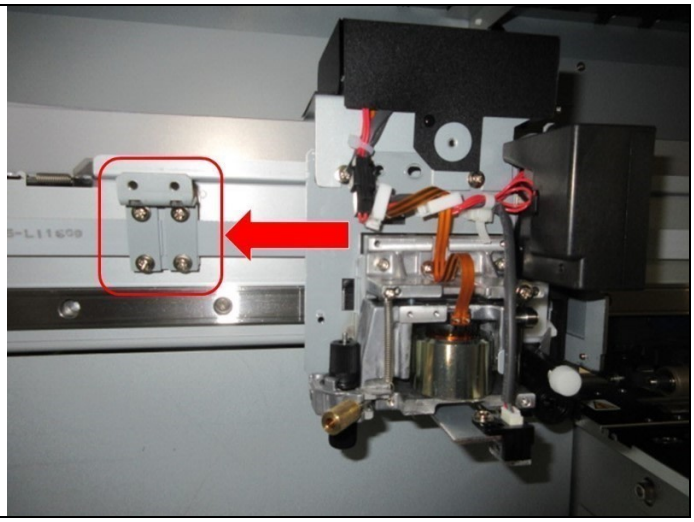

Step 17 / 19

Attach the cutting carriage cover.

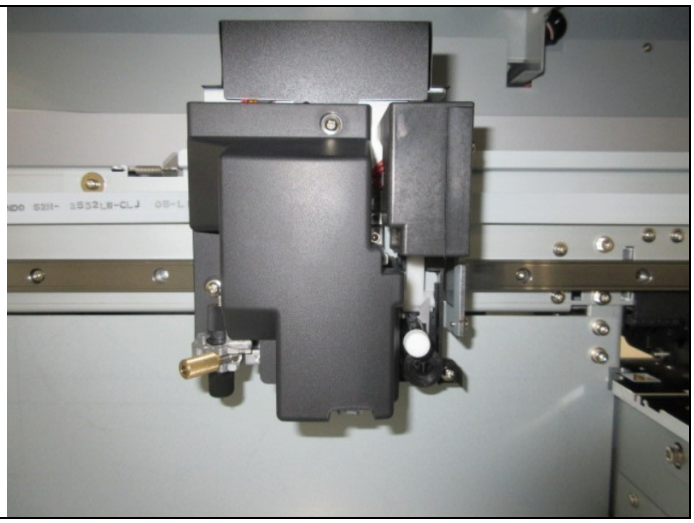

Step 18 / 19

To eliminate any slack in the carriage belt, move the cutting carriage back and forth across the entire width several times.

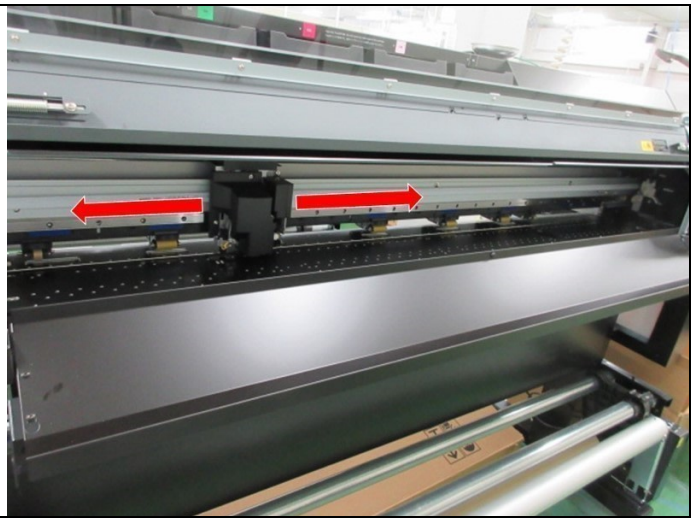

Step 19 / 19

Adjust the belt tension, belt position, limit position, and check the cutting quality.

次の手順

ベルトテンション調整
ベルト位置調整
リミット位置調整
カット品質確認

Next Step

Belt tension adjustment
Belt position adjustment
Limit position adjustment
Check cutting quality

TY-300 Encoder Scale Replacement Information

Step 1 / 4

Necessary tools

一般ツール/General Tool

プラスドライバー No.2 No.2 Phillips screwdriver	

Step 2 / 4

Typical work time

作業時間/Typical work time

作業内容/Contents of work	時間/Time
エンコーダースケール交換 Encoder scale replacement	15 min.
リニアエンコーダー位置設定 Linear encoder setup	5 min.

Step 3 / 4

Encoder Scale

作業時間/Typical work time

作業内容/Contents of work	時間/Time
エンコーダースケール交換 Encoder scale replacement	15 min.
リニアエンコーダー位置設定 Linear encoder setup	5 min.

Step 4 / 4

To avoid static damage, ground yourself before touching any electronic components. You can discharge static electricity by touching an unpainted metal surface.

TY-300 Encoder Scale Instructions

Step 1 / 13

Remove the cover.

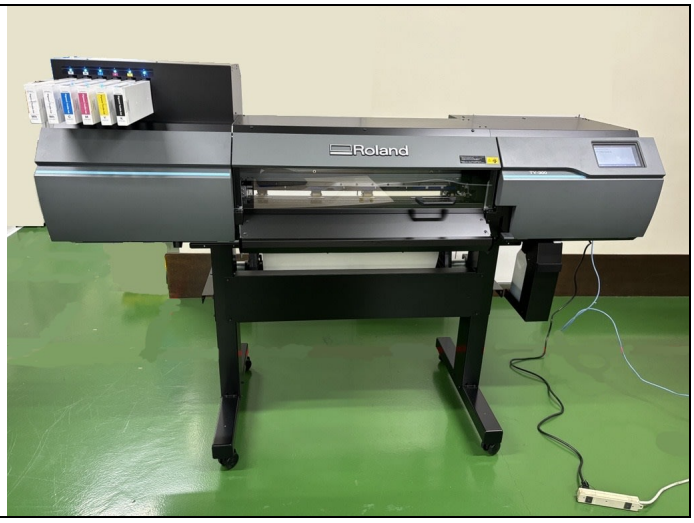

Step 2 / 13

Move the print head carriage.

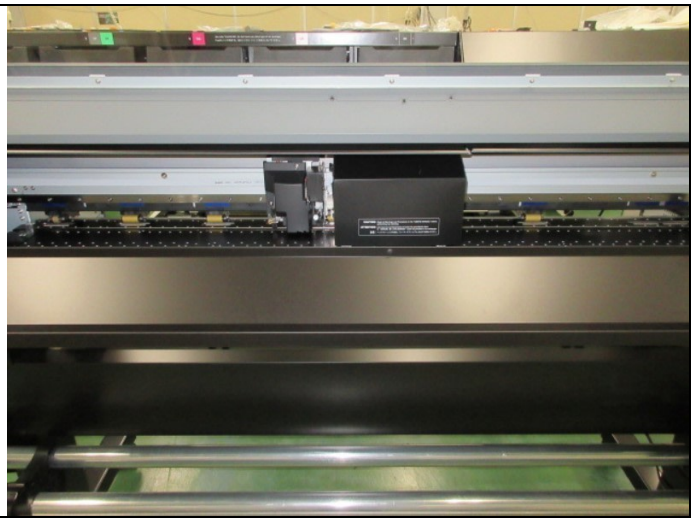

Step 3 / 13

Remove the left side spring.

Step 4 / 13

Remove the plate that secures the right side of the encoder scale, and then remove the encoder scale.

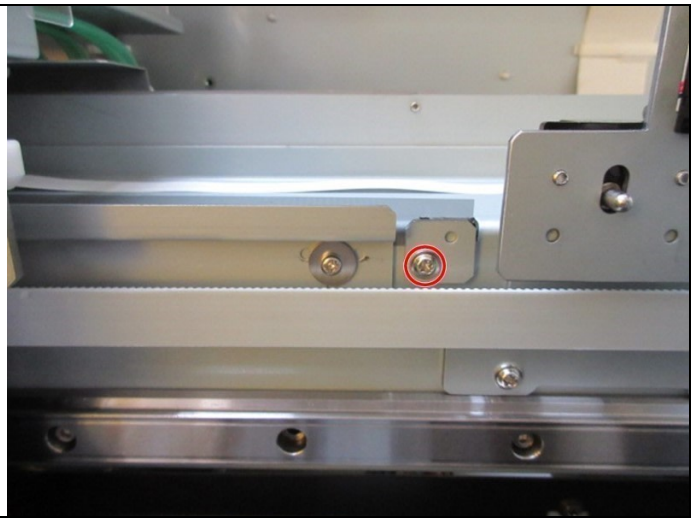

Step 5 / 13

Insert the encoder scale into the gap between the encoder plate and the guide rail. The spring is attached to the notch side.

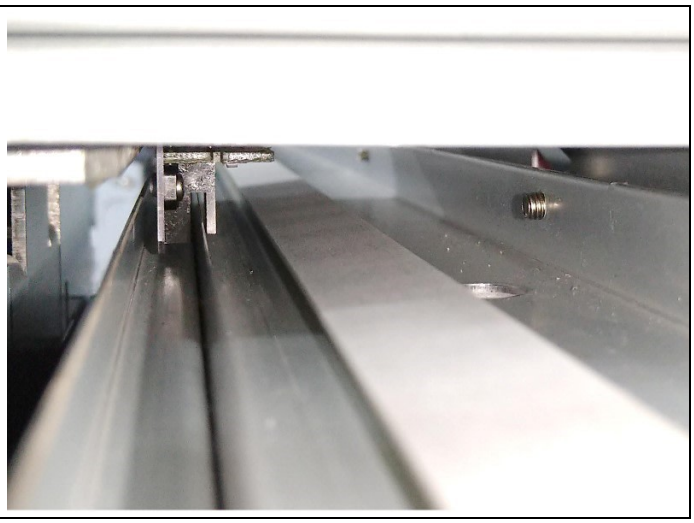

Step 6 / 13

Temporarily secure the right side of the encoder with the plate.

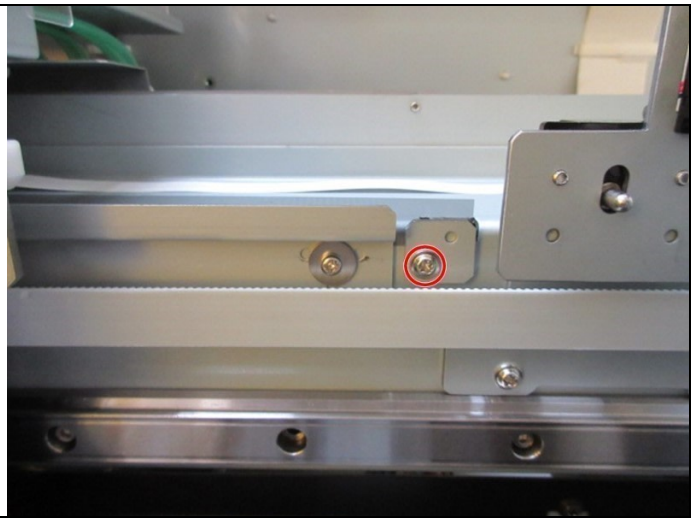

Step 7 / 13

Install the spring on the left side of the encoder.

Step 8 / 13

Re-tighten the screw on the right side.

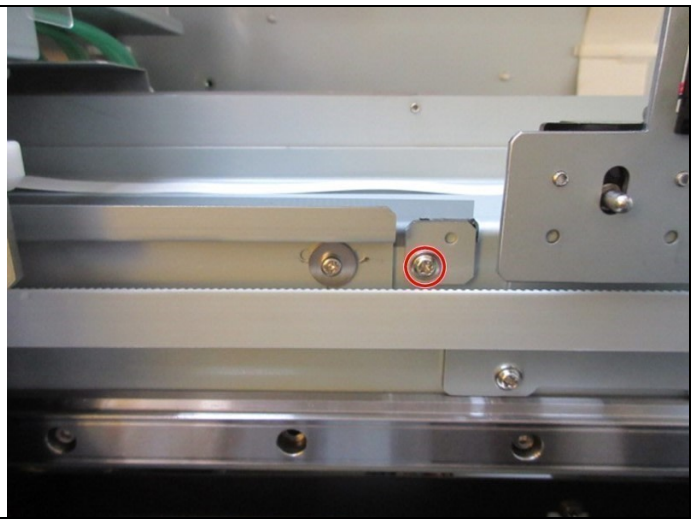

Step 9 / 13

Visually check that the encoder scale is not loose.

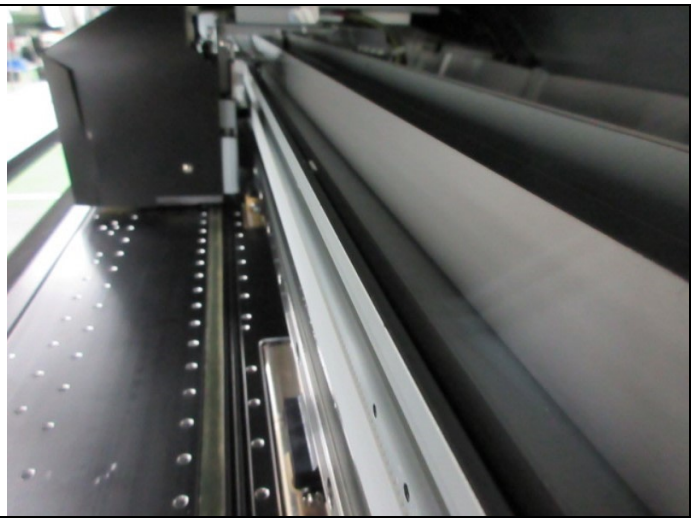

Step 10 / 13

Move the print carriage across the whole width and check that the encoder scale is not in contact with the encoder sensor. Also, check that the encoder scale is in between the slit of the encoder sensor.

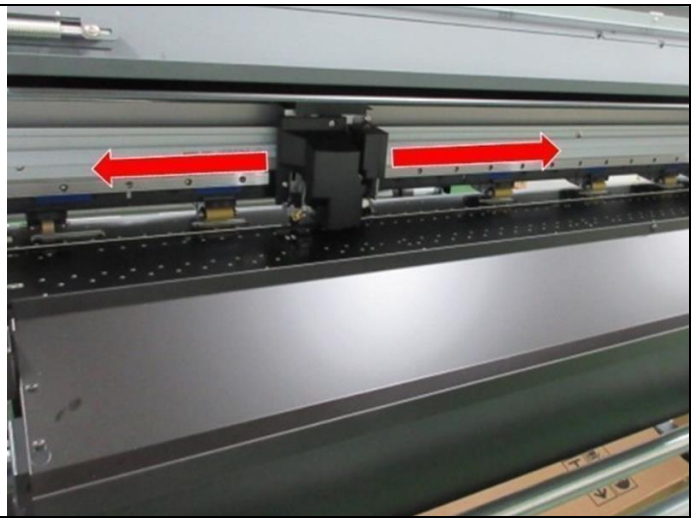

Step 11 / 13

Lock the print head carriage.

Step 12 / 13

Attach the covers.

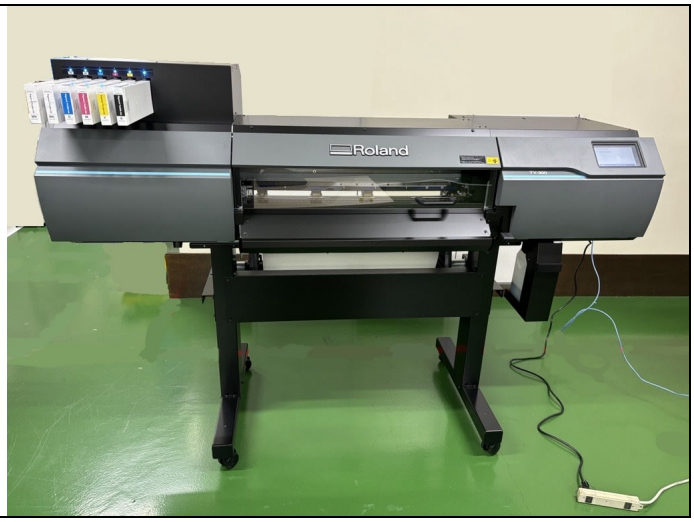

Step 13 / 13

Set the linear encoder position.

次の手順

リニアエンコーダー位置設定

Next Step

Linear encoder position setting

TY-300 Multi-sensor Replacement Information

Step 1 / 4

Necessary tools (1)

一般ツール/General Tool

プラスドライバー No.1 No.1 Phillips screwdriver	
プラスドライバー No.2 No.2 Phillips screwdriver	
テープ Tape	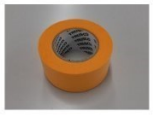

Step 2 / 4

Necessary tools (2)

一般ツール/General Tool

六角レンチ 2.5mm 2.5mm hexagonal wrench	
六角レンチ 5.0mm 5.0mm hexagonal wrench	

Step 3 / 4

Typical work time

作業時間/Typical work time

作業内容/Contents of work	時間/Time
マルチセンサー交換 Multi sensor Replacement	15 min.

Step 4 / 4

To avoid static damage, ground yourself before touching any electronic components. You can discharge static electricity by touching an unpainted metal surface.

TY-300 Multi-sensor replacement procedure

Step 1 / 16

Turn off the power and unplug the power cable.

Step 2 / 16

Detach the cutting carriage and move it to the maintenance area.

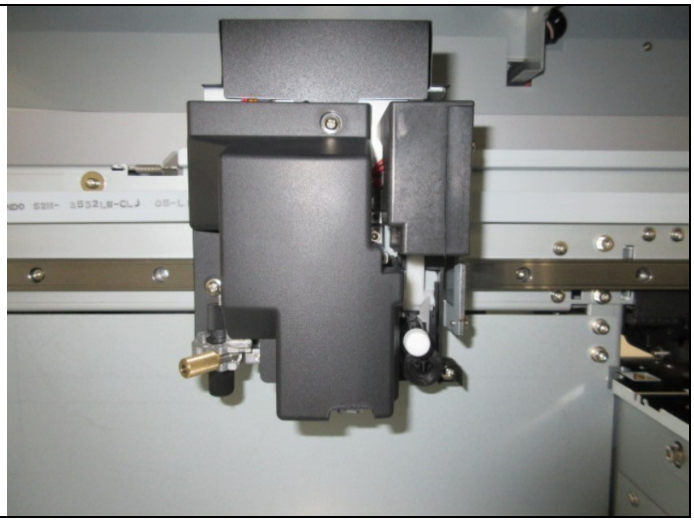

Step 3 / 16

Remove the cutting carriage cover.

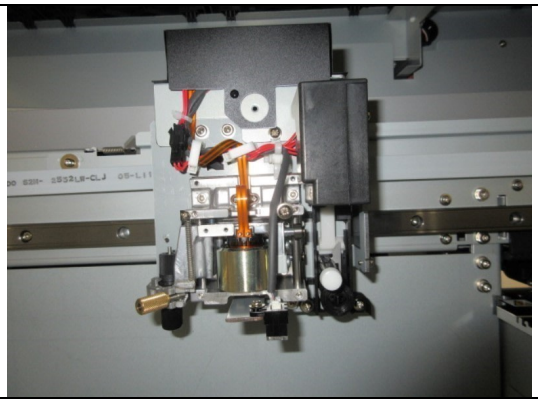

Step 4 / 16

Remove the connector.

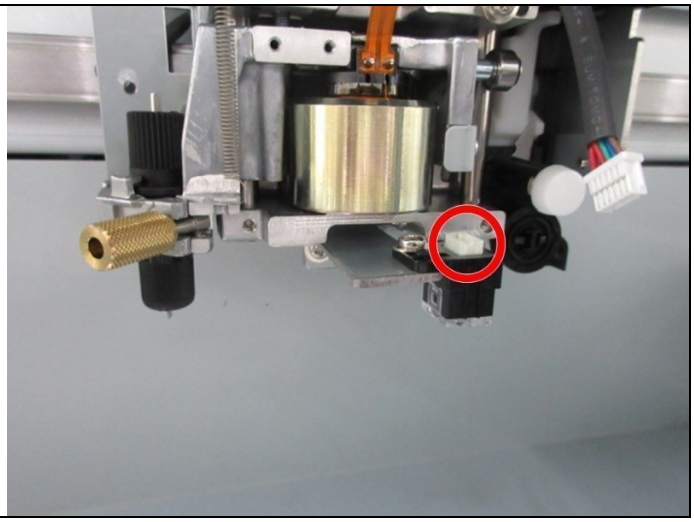

Step 5 / 16

Remove the multi-sensor and replace it with a new multi-sensor.

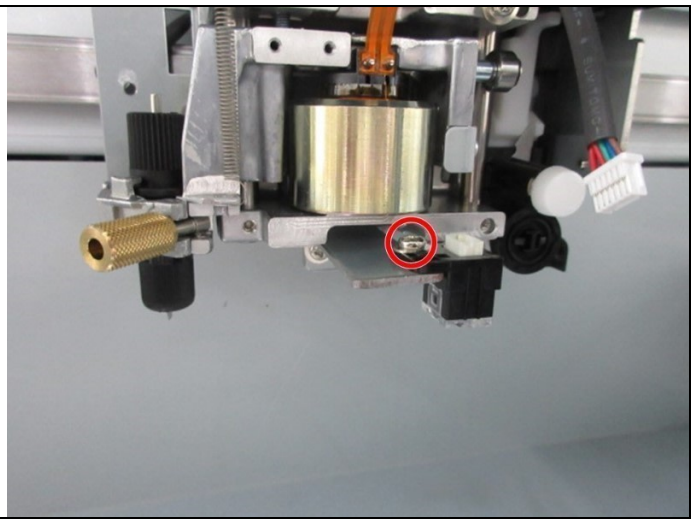

Step 6 / 16

Move the cutting carriage to the right edge of the platen.

Step 7 / 16

Fasten the hexagonal wrenches 5.0 mm and 2.5 mm with masking tape to make a jig of 7.7 mm thickness. A thickness gauge can also be used.

Step 8 / 16

[How to make a jig 1] Cut the masking tape to about 25 mm. Be careful not to use a long masking tape, as the thickness of the tape will affect the target value.

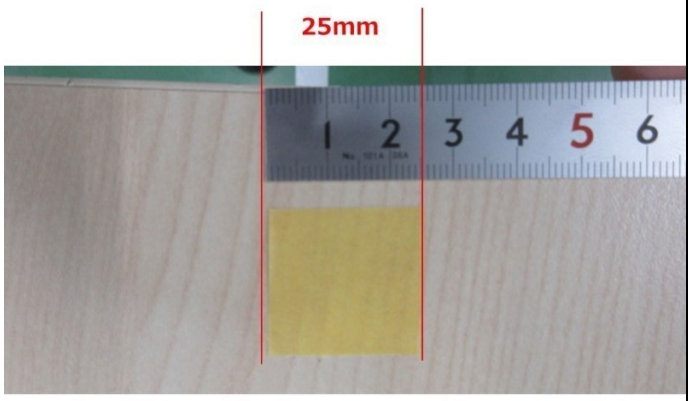

Step 9 / 16

[How to make a jig 2] Line up the hexagonal wrenches and apply masking tape to the 5.0 mm one.

Step 10 / 16

[How to make a jig 3] Wrap the masking tape around the hexagonal wrenches while pressing them together.

Step 11 / 16

Loosen the screw securing the sensor by about 1/2 turn. If the screw is loosened too much, the adjustment cannot be performed correctly.

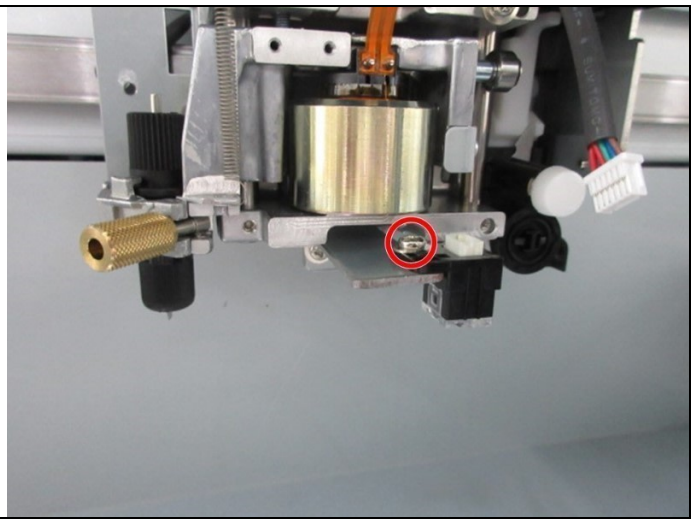

Step 12 / 16

To allow the sensor to be mounted parallel to the platen, place the jig horizontally on the sensor's lower side, towards the back of the sensor. Place the jig on the flat part of the sensor, not on the convex part.

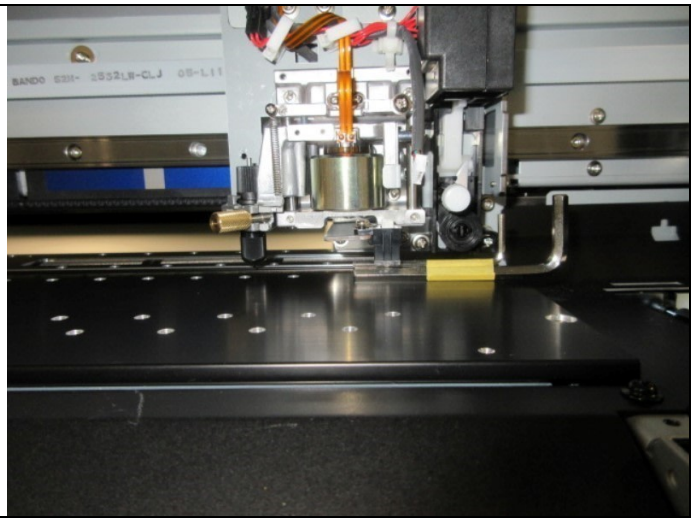

Step 13 / 16

Make sure the jig and sensor do not move and tighten the screws.

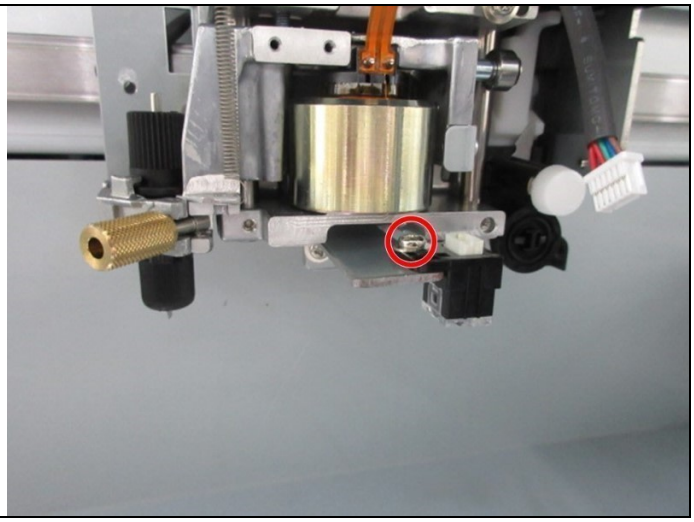

Step 14 / 16

Place the jig on the left and right sides of the sensor and check that it is installed horizontally to the bed.

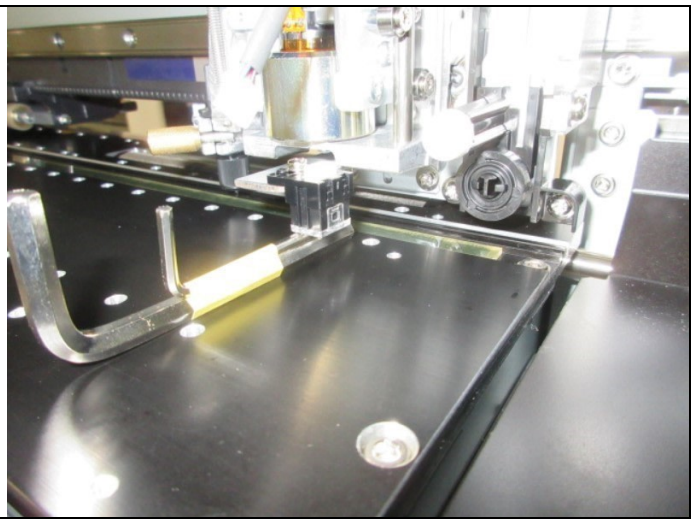

Step 15 / 16

Attach the cover that you removed and return the cutting carriage to its original position.

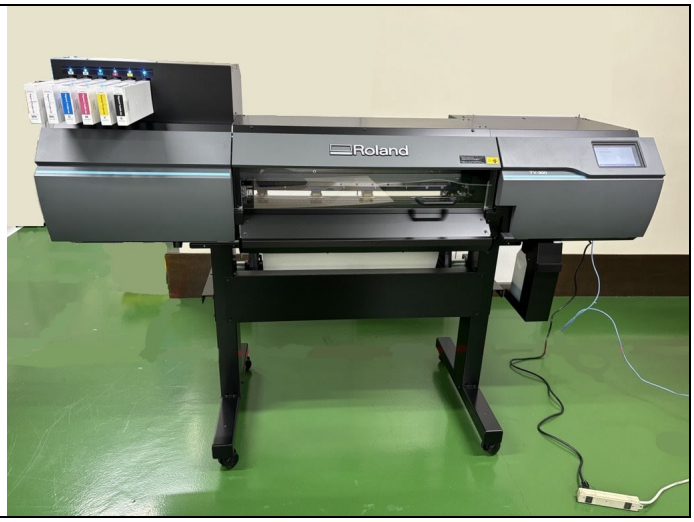

Step 16 / 16

Perform multi-color sensor adjustment.

次の手順

マルチカラーセンサー調整

Next Step

Multi-Color Sensor Adjustment

TY-300 Multi-sensor Adjustment Information

Step 1 / 2

Necessary tools Recommended media are IJ5331, IJ1220, LLSPEX, 3164G, and SPM.

一般ツール/General Tool

白いステッカーメディア（IJ5331推奨） White sticker media (IJ5331 recommended)	

Step 2 / 2

Typical work time

作業時間/Typical work time

作業内容/Contents of work	時間/Time
マルチセンサー調整 Multi sensor Adjustment	5 min.

TY-300 Multi-sensor adjustment procedure

Step 1 / 9

Connect the machine to Peck2 and enter service mode.

Step 2 / 9

Load the white sticker media and perform set up.

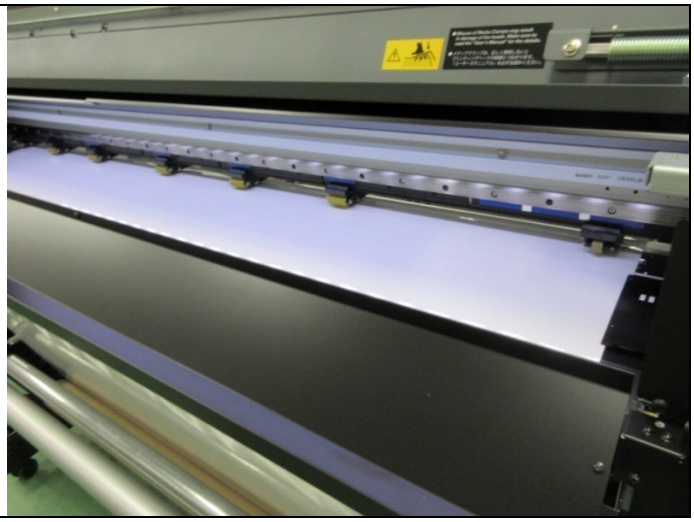

Step 3 / 9

Select [SERVICE MENU] □[SUB MENU] □[MULTI SENSOR] □[SENS. ADJUST].

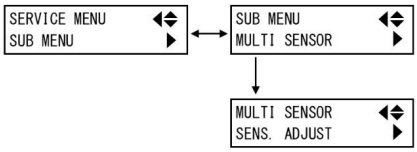

Step 4 / 9

Adjust the LED intensity so that the light-receiving voltage is 0.50 V±0. Lowering the value lowers the light-receiving voltage, and raising the value raises it.

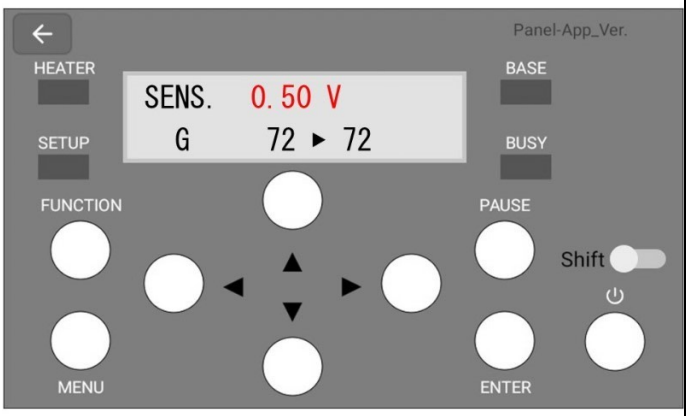

Step 5 / 9

Remove the media.

Step 6 / 9

Use the multi-sensor to check the bed and media clamp. Attach the media clamps if not attached.

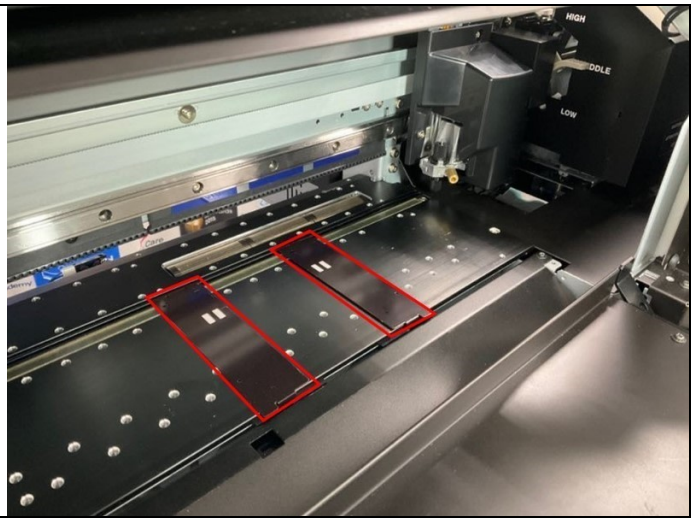

Step 7 / 9

Select [SERVICE MENU] > [SUB MENU] > [MULTI SENSOR] > [SENS. CHECK].

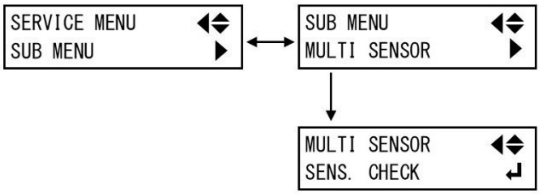

Step 8 / 9

Check that [EDGE 8] is displayed in the upper part of the panel and [SLIT OK] is displayed in the lower part. If this is the case, the sensor works properly and the work is complete.

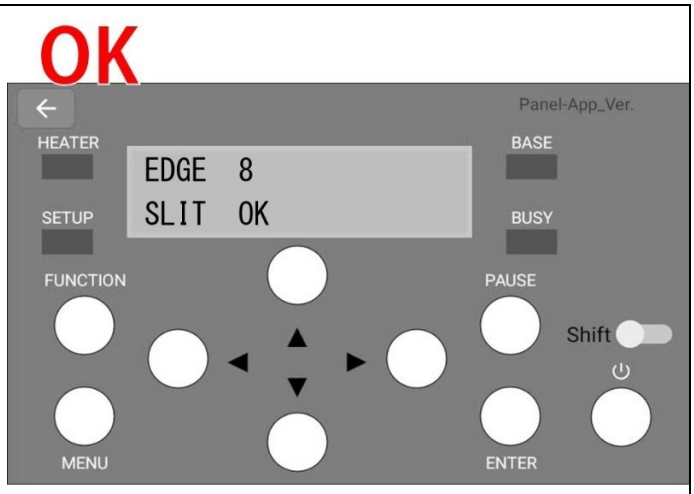

Step 9 / 9

If a different display from the previous page appears on the panel, please check and adjust again.

1. Check that there are no foreign objects, scratches, dirt, etc. on the platen or media clamp.
2. Check that the media clamp is not deformed.

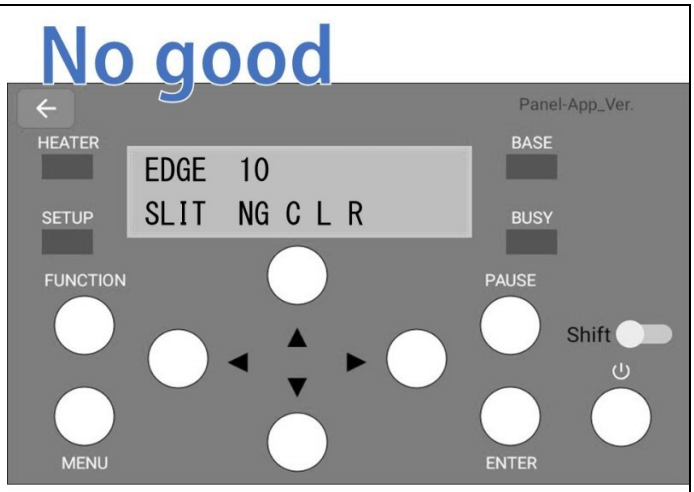

3. Make sure the multi-sensor is installed correctly.

No good

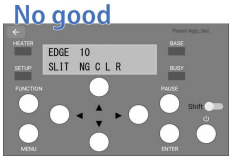

TY-300 Battery Replacement Information

Step 1 / 3

Necessary tools

一般ツール/General Tool

プラスドライバー No.2 No.2 Phillips screwdriver	

特殊治具/Special Tools

無し None	

Step 2 / 3

Typical work time

作業時間/Typical work time

作業内容/Contents of work	時間/Time
電池交換 Battery Replacement	7 min.
日時の設定 Time and date setting	2 min.

Step 3 / 3

To avoid static damage, ground yourself before touching any electronic components. You can discharge static electricity by touching an unpainted metal surface.

TY-300 Battery Replacement procedure

Step 1 / 8

[Caution] The lithium battery may explode if not replaced correctly. Replace only with the same model battery (or equivalent) as the original battery. Dispose of used batteries according to the manufacturer's instructions. Lithium battery: CR2032

Step 2 / 8

[Things that are forbidden] Do not recharge, short-circuit, disassemble or throw into fire the lithium battery, as this may cause it to overheat, explode or catch fire.

Step 3 / 8

[Disposal] When disposing of or storing lithium batteries, insulate them with tape to prevent overheating, explosion, or fire.

Step 4 / 8

Remove the cover.

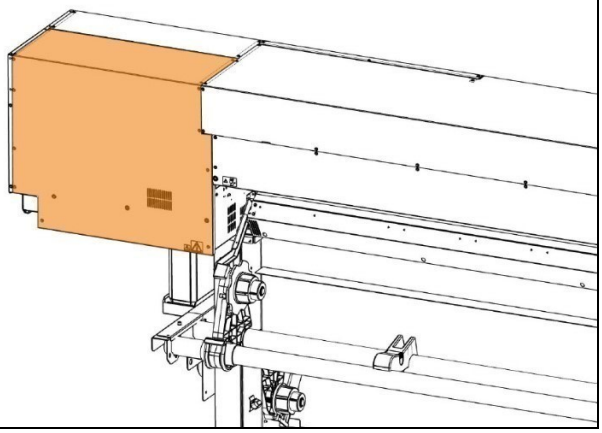

Step 5 / 8

While pushing the battery on the main board to the back, tilt it upwards to remove it.

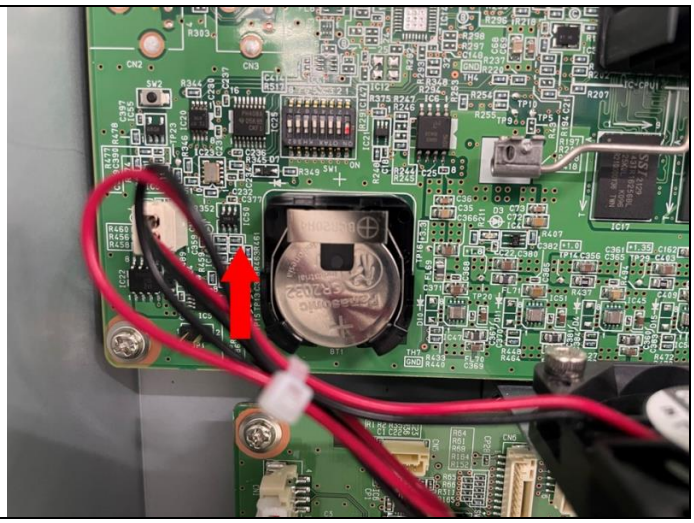

Step 6 / 8

Replace the battery with a new one. Be careful to insert the battery in the correct direction.

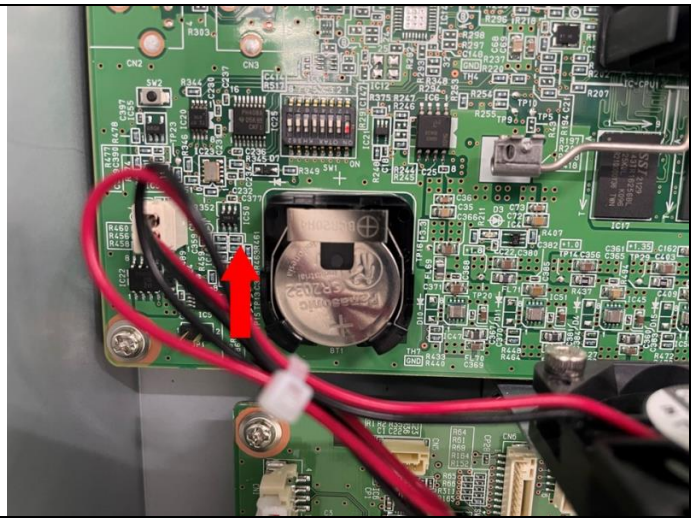

Step 7 / 8

Turn the power on and connect Peck2 to the machine and enter service mode.

Step 8 / 8

Set the date and time.

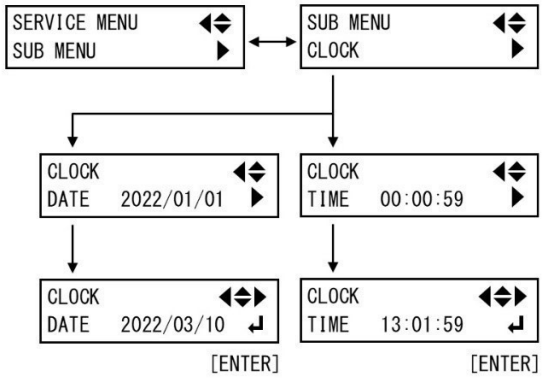

TY-300 Wiper Position Adjustment Information

Step 1 / 2

Necessary tools

Step 2 / 2

Typical work time

TY-300 Wiper position Adjustment procedure

Step 1 / 6

Connect Peck2 to the machine and enter service mode.

Step 2 / 6

Select [I/S MENU] > [WIPE ADJUST] > [WIPE HEIGHT].

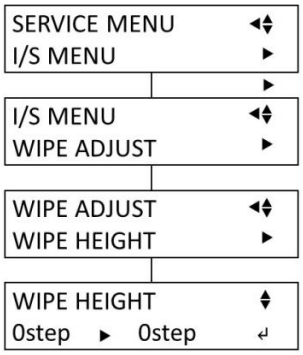

Step 3 / 6

Check the position of the wiper.

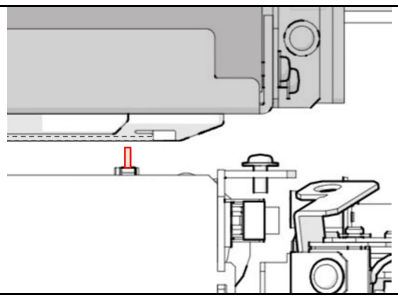

Step 4 / 6

Press the [□] key to raise the wiper, and when the tip of the wiper touches the surface of the print head, press the [ENTER] key.

- If the wiper is raised too high, press the [□] key to return it to its original position.

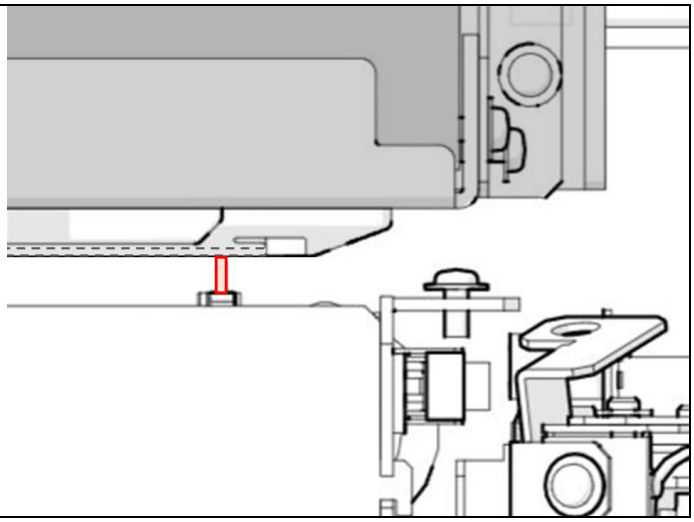

Step 5 / 6

Select [I/S MENU] > [WIPE ADJUST] > [WIPE CARRIAGE].

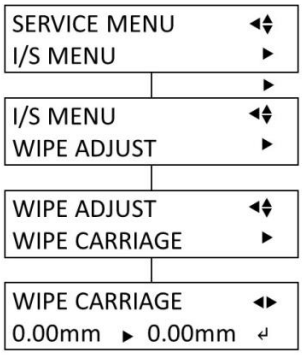

Step 6 / 6

[□] [□] □□□□

TY-300 Linear Encoder Setup

Step 1 / 2

Necessary tools

一般ツール/General Tool

無し None	

特殊治具/Special Tools

無し None	

Step 2 / 2

Typical work time

作業時間/Typical work time

作業内容/Contents of work	時間/Time
リニアエンコーダー位置設定 Linear encoder setup	5 min.

TY-300 Linear Encoder Setup

Step 1 / 4

Connect Peck2 to the machine and enter service mode.

Step 2 / 4

Remove the media if installed and lower the pinch rollers.

Step 3 / 4

Select [SERVICE MENU] > [PRINT MENU] > [LINEAR ENCODER] and press the [ENTER] key.

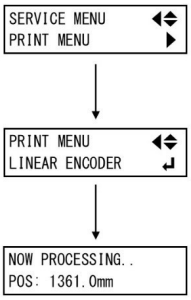

Step 4 / 4

When the adjustment is complete, one of the following messages will be displayed: □ [SETUP COMPLETED] indicates normal completion □ [NG:EXTEND], [NG:SHLINK], [NG:GO BACK], or [NG:BLANK ****.*mm] is displayed, identify the cause of the problem and take appropriate measures before carrying out adjustment again.

確認/confirm

LINEAR ENCODER ◄ SETUP COMPLETED	作業終了 Work done
LINEAR ENCODER ◄ SETUP FAILED	再調整 Readjustment

TY-300 Feed Calibration Information

Step 1 / 2

Necessary tools *A setup width of 510 mm or more is required to perform test printing.

一般ツール/General Tool

SP-M(マットPET合成紙) SP-M(Matter-PET artificial paper)

Step 2 / 2

Typical work time

作業時間/Typical work time

作業内容/Contents of work	時間/Time
距離補正(送り方向) Feed calibration	15 min.

TY-300 Feed Calibration Procedure

Step 1 / 6

Connect Peck2 to the machine and enter service mode.

Step 2 / 6

Attach the SP-M to the machine and set it up.

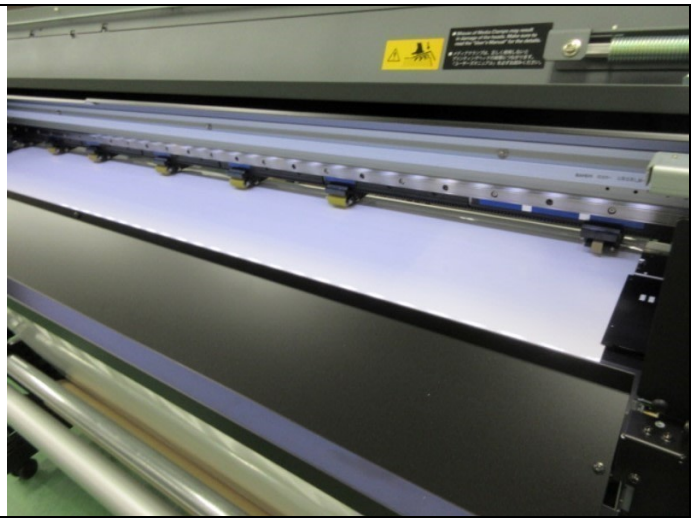

Step 3 / 6

Select [PRINT MENU] > [CALIB.DEFAULT] > [TEST PRINT] and press [ENTER].

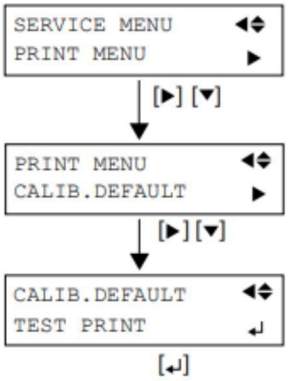

Step 4 / 6

Measure the length in the feed direction from the test print result. The test pattern is always output with a correction value of 0.00%. The test pattern will not change even if you change the value in the [SETTING] menu.

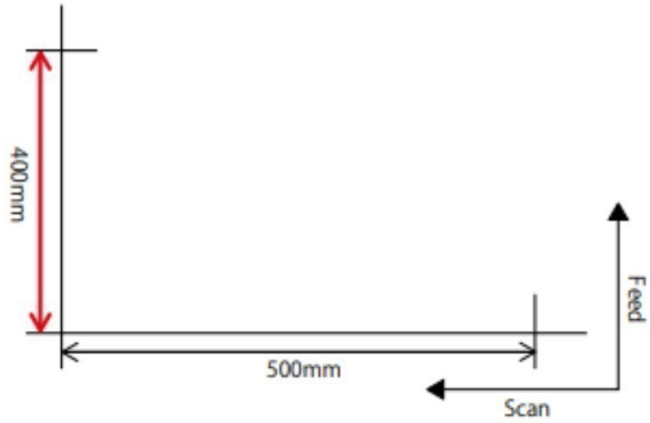

Step 5 / 6

The correction value is calculated using a formula.

$$\text{補正値} = \frac{400 - \text{測定値}}{\text{測定値}} \times 100$$

$$\text{Correction value} = \frac{400 - \text{Measured value}}{\text{Measured value}} \times 100$$

Step 6 / 6

Select [PRINT MENU] > [CALIB.DEFAULT] > [SETTING], use the [ ] [ ] keys to input the correction value, and press the [ENTER] key to save the settings.

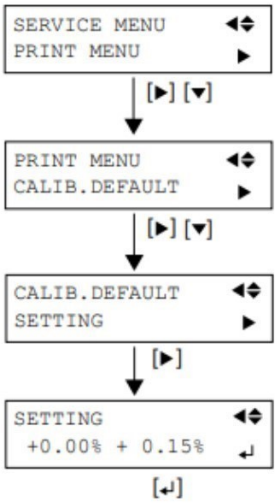

TY-300 Tool Pressure Adjustment Information

Step 1 / 3

Necessary tools

一般ツール/General Tool

プラスドライバー No.2 No.2 Phillips screwdriver	

Step 2 / 3

Special tools

特殊治具/Special Tools

ST-002 TENSION GAUGE 300GF/300CN	
ST-006 WHITE DUMMY PEN	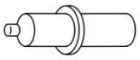
ST-012 DIAL TENSION METER DTB-50	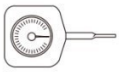

Step 3 / 3

Typical work time

作業時間/Typical work time

作業内容/Contents of work	時間/Time
筆圧調整 Tool pressure adjustment	15 min.

TY-300 Tool Pressure Adjustment Procedure

Step 1 / 7

Turn the power on and connect Peck2 to the machine and enter service mode.

Step 2 / 7

Select [CUTTING MENU] > [FORCE ADJUST].

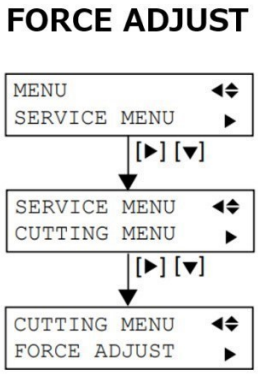

Step 3 / 7

Attach the dummy pen to the cutting carriage.

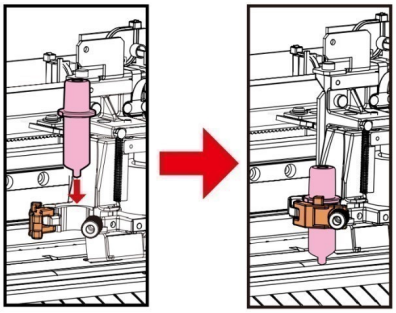

Step 4 / 7

Select [LOW] from the [FORCE ADJUST] menu. Press the [PAUSE] key to lower the cutting carriage.

FORCE ADJUST LOW

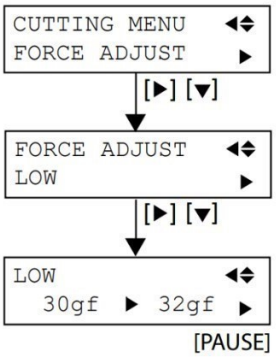

Step 5 / 7

Lift the pen holder with the dial tension meter, and use the [▯] [▯] keys to change and input the value when the pen tip leaves the bed. Press the [ENTER] key to save the setting.

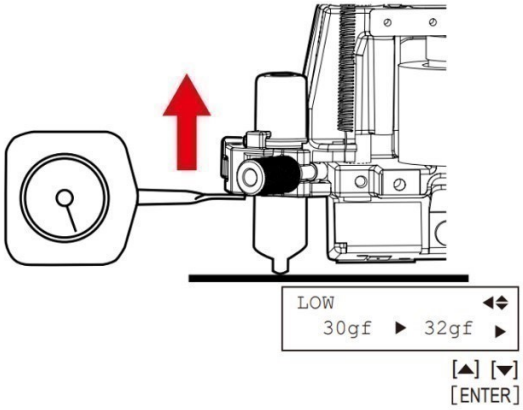

Step 6 / 7

Select [HIGH] from the [FORCE ADJUST] menu. Press the [PAUSE] key to lower the cutting carriage.

FORCE ADJUST HIGH

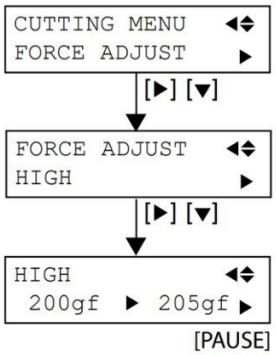

Step 7 / 7

Lift the pen holder with the tension gauge, enter the tension gauge value when the pen tip leaves the bed, and press the [ENTER] key to save the setting.

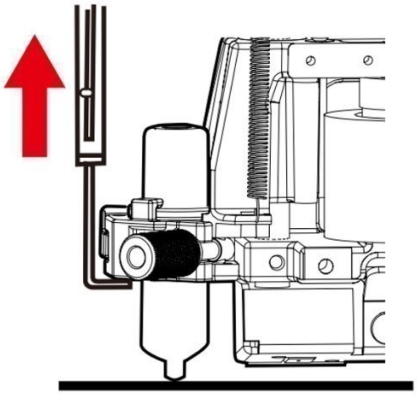

TY-300 Cutting Carriage Replacement Information

Step 1 / 5

Necessary tools

Step 2 / 5

Special tools

Step 3 / 5

Typical work time

Step 4 / 5

Covers that need to be removed

Step 5 / 5

To avoid static damage, ground yourself before touching any electronic components. You can discharge static electricity by touching an unpainted metal surface.

TY-300 Cutting Carriage Replacement Procedure

Step 1 / 13

Turn off the power and unplug the power cable.

Step 2 / 13

Move the cutting carriage to the maintenance area.

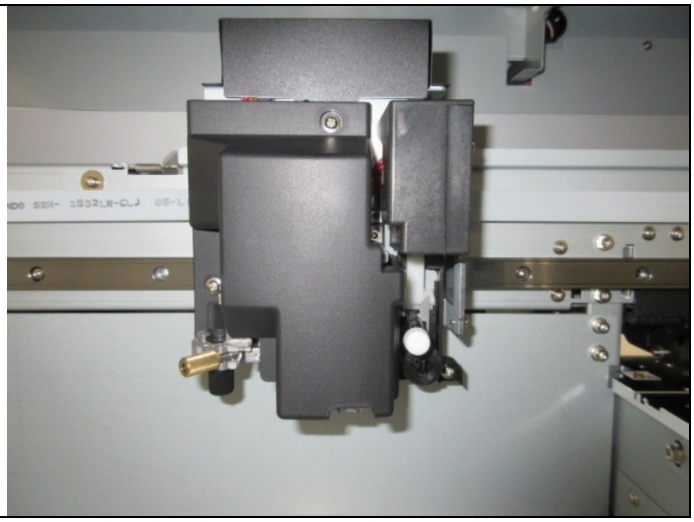

Step 3 / 13

Remove the cutter holder.

Step 4 / 13

Remove the cutting carriage cover.

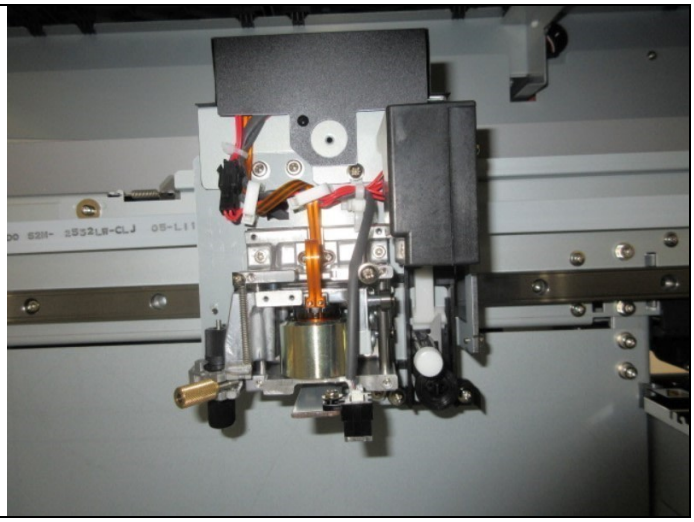

Step 5 / 13

Remove the cutting carriage board cover.

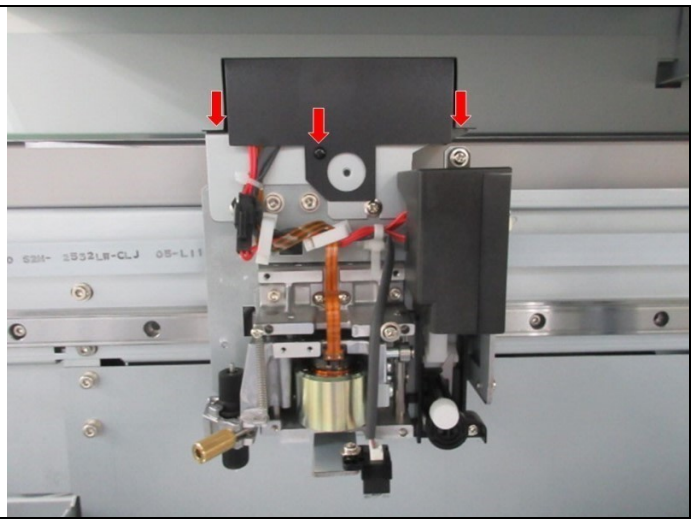

Step 6 / 13

Remove the flex cable from the cutting carriage board.

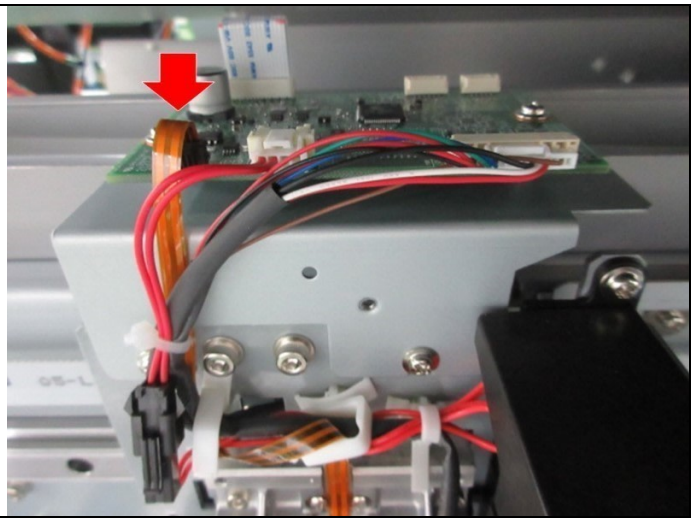

Step 7 / 13

Remove the two clamps and remove the flex cables.

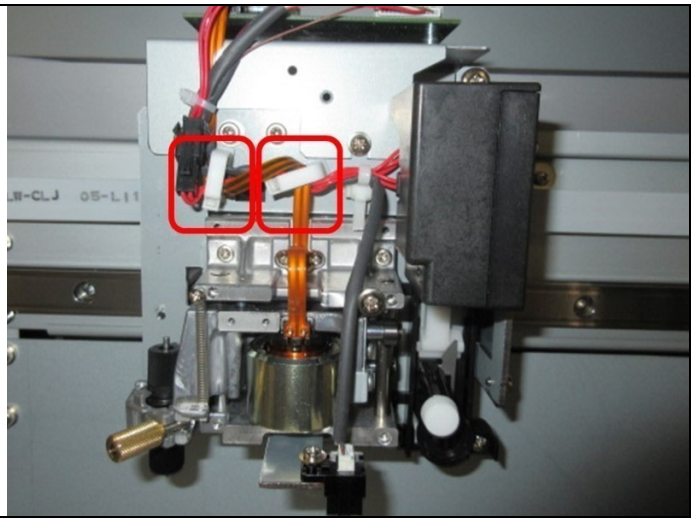

Step 8 / 13

Remove the multi-sensor connector.

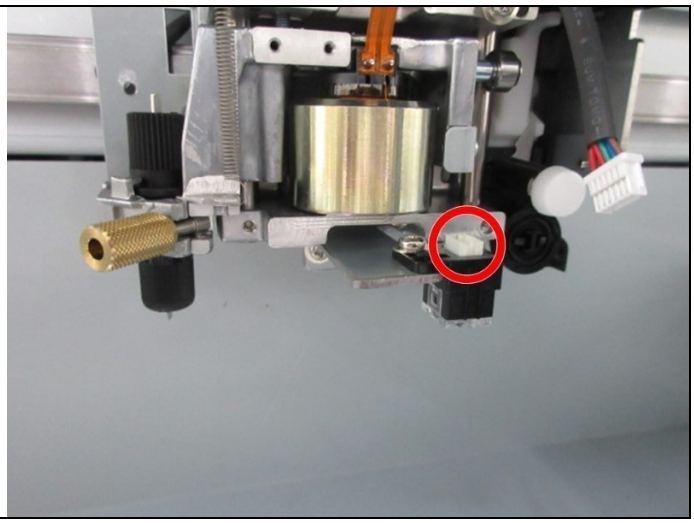

Step 9 / 13

Remove the three screws.

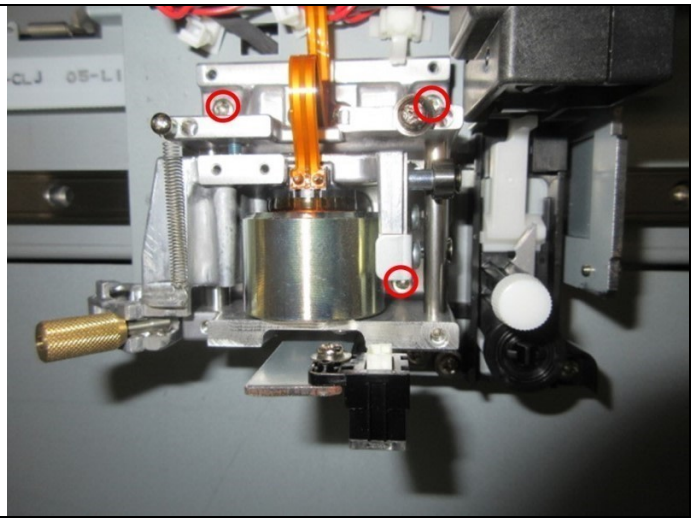

Step 10 / 13

Remove the cutting carriage.

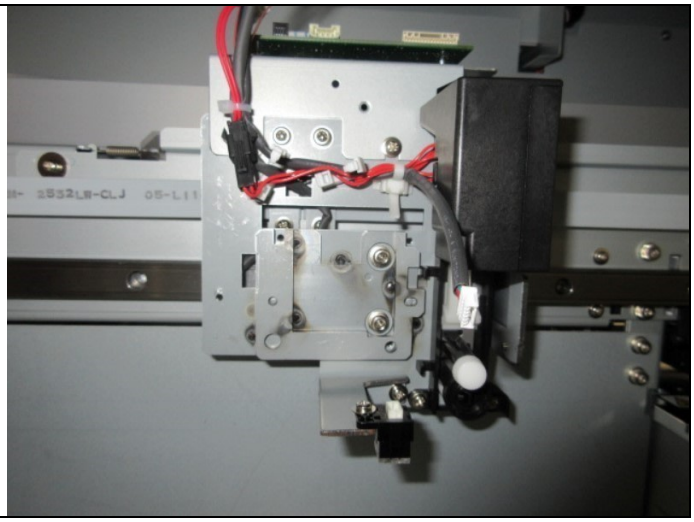

Step 11 / 13

Install the new cutting carriage.

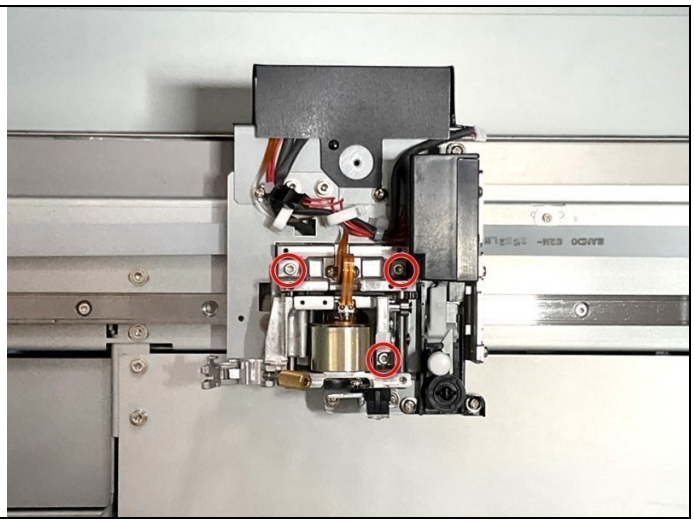

Step 12 / 13

Reinstall the removed parts and put them back in their original positions.

Step 13 / 13

Please do the following:

1. Limit position adjustment
2. Tool height adjustment
3. Pen pressure adjustment
4. Crop cut position adjustment [CUTTING MENU] > [CROP-CUT ADJ.]
5. Print/Cut Position Adjustment [CUTTING MENU] > [PRINT-CUT ADJ.]

次の手順

キャリッジロック位置設定
ツール高さ調整
筆圧調整
クロップカット位置調整
プリント＆カット位置調整

Next Step

Carriage Lock Position Setting
Tool Hight Adjustment
Tool Pressure Adjustment
Crop-Cut Position Adjustment
Print-Cut Position Adjustment

TY-300 Panel Replacement Procedure

Step 1 / 10

Turn off the power and unplug the power cable.

Step 2 / 10

Remove the screws and remove the top cover.

Step 3 / 10

Remove the screws at the back right of the panel.

Step 4 / 10

Remove the screws and remove the back cover.

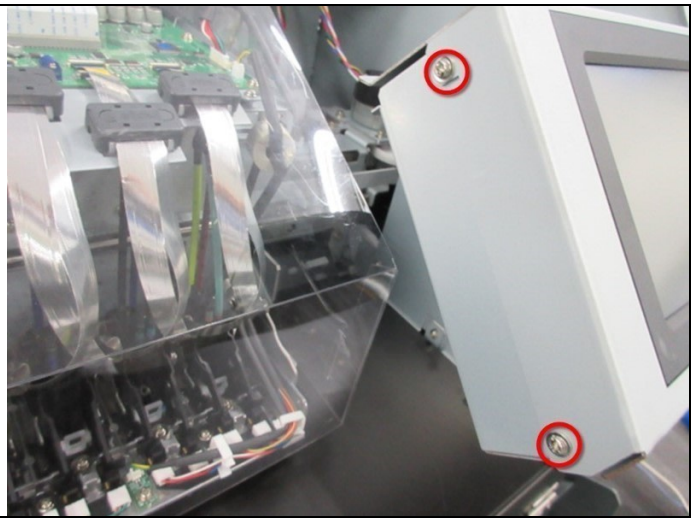

Step 5 / 10

Push in and remove the cable tie, then remove the screw.

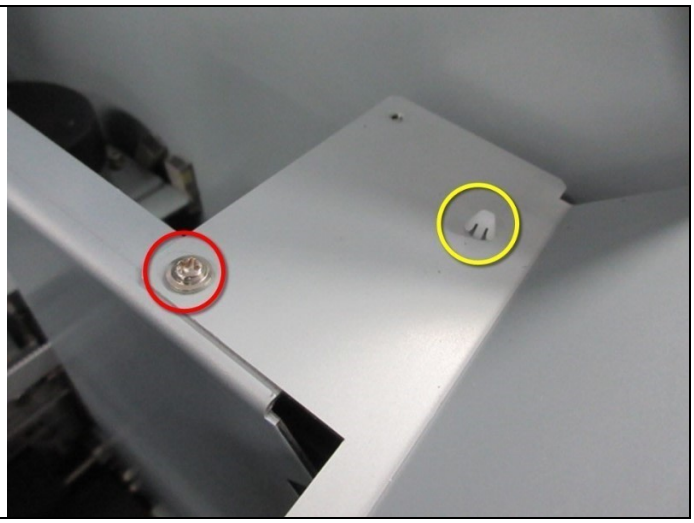

Step 6 / 10

Remove the screw and remove the stay. You can remove the stay without removing the upper screw.

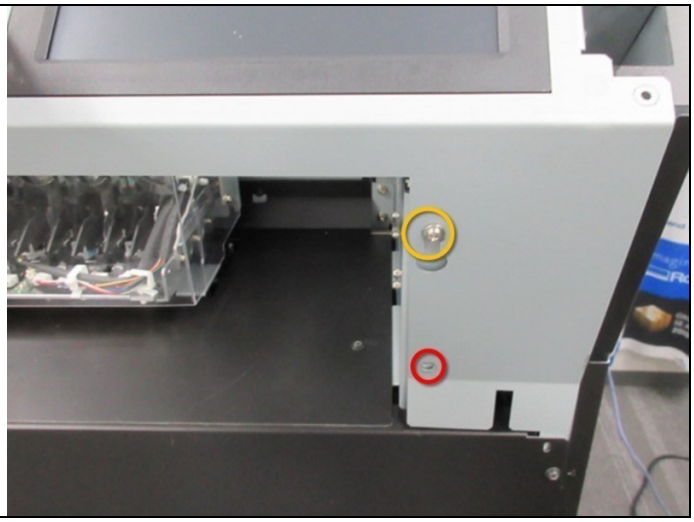

Step 7 / 10

Remove the panel connector.

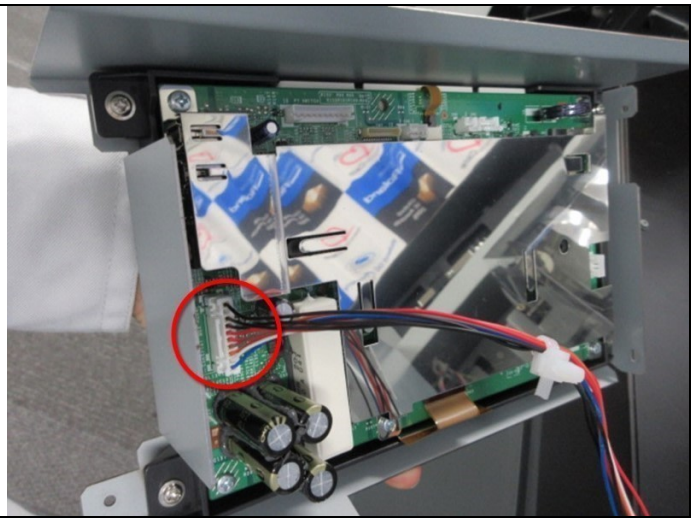

Step 8 / 10

Replace with a new panel.

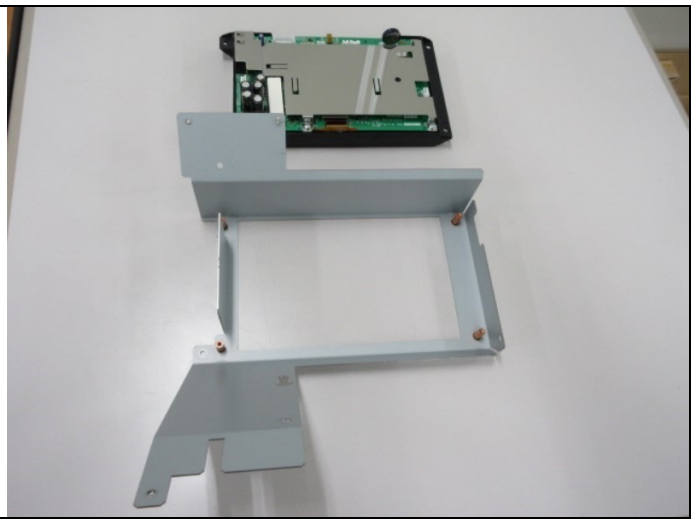

Step 9 / 10

Attach the cover.

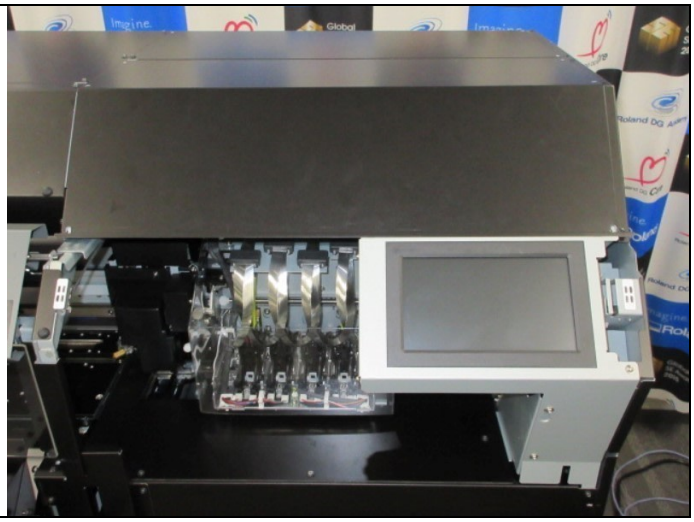

Step 10 / 10

Perform firmware update.

次の手順

ファームウエアアップデート

Next Step

Firmware Update